For Use in CCO Written Examinations

LOAD CHART MANUAL
LIFT DIRECTOR—MOBILE CRANES

These charts have been adapted from the original manufacturer's charts for use in CCO Written Examinations.

This supplement is not to be used for any other purpose.

Copyright 2013–2014 National Commission for the Certification of Crane Operators (NCCCO). All rights reserved. This document may not be reproduced in whole or in part without the express written permission of the manufacturer and the consent of NCCCO.

REV 04/14

HOLD HARMLESS/RELEASE AGREEMENT

The user of this publication for and in consideration of the assistance, cooperation, and information provided by the National Commission for the Certification of Crane Operators (NCCCO) in this publication, *Lift Director Load Chart Manual,* the receipt of which is acknowledged, does hereby and for all future time release and hold harmless from any liability, and forever discharge for itself, its administrators and assigns the said NCCCO from all and any manner of action or demands whatsoever in law, in admiralty, or in equity, which against NCCCO anyone ever had, now have, or which shall later be claimed. This Agreement relates specifically to any cause of action arising out of the publication, information provided, subsequent conduct, and any use of the information provided in this publication and related uses or demonstrations of skills, methods, and techniques cited in the publication. This mutually beneficial release and hold-harmless agreement may not be changed orally and exists in perpetuity. This publication is issued solely as a public service to improve the lifting industry and promote public safety.

NO WARRANTY

Information and materials provided in this *Lift Director Load Chart Manual* are provided "as is" without warranty of any kind, either express or implied, including without limitation warranties of merchantability, fitness for a particular purpose, and non-infringement. NCCCO specifically does not make any warranties or representations as to the accuracy or completeness of any such information and materials. Under no circumstances shall NCCCO be liable for any loss, damage, liability, or expense incurred or suffered which is claimed to have resulted from use of this publication, including without limitation, any fault, error, omission, interruption, or delay with respect thereto. Use of this publication is at user's sole risk. Under no circumstances, including, but not limited to, negligence, shall NCCCO be liable for any direct, indirect, incidental, special, or consequential damages, even if NCCCO has been advised of the possibility of such damages.

Copyright 2013–2014 by the National Commission for the Certification of Crane Operators. All rights reserved. No part of this book may be reproduced or transmitted in any form or by any means, electronic or mechanical, including photocopying, recording, or by any information storage and retrieval system, without prior written permission from the publisher. For information, contact the publisher, the National Commission for the Certification of Crane Operators, at info@nccco.org.

Copyright 2013–2014 National Commission for the Certification of Crane Operators. All rights reserved. LD LCM REV 04/14

For Use in CCO Written Examinations

ROUGH TERRAIN TELESCOPIC BOOM CRANE—SWING CAB (TLL)

These charts have been adapted from the original manufacturer's charts for use in CCO Written Examinations.

This supplement is not to be used for any other purpose.

Copyright 2013–2014 National Commission for the Certification of Crane Operators (NCCCO). All rights reserved. This document may not be reproduced in whole or in part without express written permission of the manufacturer and the consent of NCCCO.

NOTES FOR LIFTING CAPACITIES

GENERAL:

1. Rated loads as shown on lift chart pertain to this machine as originally manufactured and equipped. Modifications to the machine or use of optional equipment other than that specified can result in a reduction of capacity.
2. Construction equipment can be hazardous if improperly operated or maintained. Operation and maintenance of this machine shall be in compliance with the information in the Operator's and Safety Handbook, Service Manual and Parts Manual supplied with this machine. If these manuals are missing, order replacements from the manufacturer through the distributor.
3. The operator and other personnel associated with machine shall fully acquaint themselves with the latest American National Safety Standards (ASME/ANSI) for cranes.

SETUP:

1. The machine shall be level and on a firm supporting surface. Depending on the nature of the supporting surface, it may be necessary to have structural supports under the outrigger floats or tires to spread the load to a larger bearing surface.
2. For outrigger operation, all outriggers shall be properly extended with tires raised free of crane weight before operating the boom or lifting loads.
3. When machine is equipped with center front stabilizer, the front stabilizer shall be set in accordance with instructions in Operator's and Safety Handbook.
4. When equipped with removable and/or extendible counterweight, the proper counterweight shall be installed and fully extended before and during operation.
5. Tires shall be inflated to the recommended pressure before lifting on rubber.
6. With certain boom and hoist tackle combinations, maximum capacities may not be obtainable with standard cable lengths.
7. Unless approved by the crane manufacturer, do not travel with boom extension or jib erected unless otherwise noted. Refer to Operator's and Safety Handbook for job-site travel information.

OPERATION:

1. Rated loads at rated radius shall not be exceeded. Do not attempt to tip the machine to determine allowable loads. For clamshell, grapple, magnet or concrete bucket operation, weight of component and load must not exceed 80% of rated lifting capacities.
2. All rated loads have been tested to and meet the requirements of SAE J1063 - Cantilevered Boom Crane Structures - Method of Test, and do not exceed 85% of the tipping load on outriggers fully extended. Capacities correspond to DIN 15019 Part 2 (Test Load = 1.25P + 0.1A) on outriggers 50% and 0% extended (fully retracted). 0.1A represents one tenth (0.10) of the total boom weight reduced to the boom point. Loads are also determined by SAE J765 - Crane Stability Test Code.
3. Rated loads include the weight of hookblock, slings and auxiliary lifting devices and their weights shall be subtracted from the listed rating to obtain the net load to be lifted. When more than the minimum required parts of line needed to pick the load are used, the additional rope weight as measured from the lower sheaves of the the main boom nose shall be considered part of the load to be lifted. When both the hook block and headache ball are reeved, the lifting device that is NOT in use, including the line as measured from the lower sheave(s) of the nose supporting the unused device shall be considered part of the load.
4. Load ratings are based on freely suspended loads. No attempt shall be made to move a load horizontally on the ground in any direction.
5. The maximum in-service wind speed is 20 mph. It is recommended when wind velocity is above 32 km/h, rated loads and boom lengths shall be appropriately reduced. For machines not in-service, the main boom should be retracted and lowered with the swing brake set in wind velocities over 30 mph.
6. Rated loads are for lift crane service only.
7. Do not operate at a radius or boom length where capacities are not listed. At these positions, the machine may overturn without any load on the hook.
8. The maximum load which can be telescoped is not definable because of variations in loadings and crane maintenance, but it is safe to attempt retraction and extension of the boom within the limits of the capacity chart.
9. When the boom length or lift radius or both are between values listed, the smallest load shown at either the next larger radius or next longer or shorter boom length shall be used.
10. For safe operation, the user shall make due allowances for his particular job conditions, such as: soft or uneven ground, out of level conditions, high winds, side loads, pendulum action, jerking or sudden stopping of loads, experience of personnel, two machine (tandem) lifts, traveling with loads, electric wires, obstacles, hazardous conditions, etc. Side pull on boom or jib is extremely dangerous.
11. If machine is equipped with individually controlled powered boom sections, the boom sections must be extended equally at all times.
12. Never handle personnel with this machine unless the requirements of the applicable national, state, and local regulations and safety codes are met.
13. Keep load handling devices a minimum of 42 inches below boom head at all times.
14. The boom angle before loading should be greater than the loaded boom angle to account for deflection.
15. Capacities appearing above the bold line are based on structural strength and tipping should not be relied upon as a capacity limitation.
16. Capacities for the 32 ft. boom length shall be lifted with boom fully retracted. If boom is not fully retracted, capacities shall not exceed those shown for the 40 ft. boom length.
17. When operating the machine in the "On Outriggers 50% Extended (14 ft. spread)" mode, the outrigger beam pins must be engaged. When operating in the "On Outriggers 0% Extended (7.8 ft. spread)" mode, the outrigger beams must be fully retracted. Failure to follow these precautions could result in structural damage or loss of stability of the machine.
18. Regardless of counterweight and outrigger spread configuration, no deduct is required from the main boom charts for a stowed boom extension.
19. Do not lift loads when boom is fully lowered. The Load Moment Indicator (LMI) senses pressure and will not provide warnings or lockout. The crane can become overloaded if lift cylinder(s) is fully retracted.
20. The maximum outrigger pad load is 59,000 lb.

DEFINITIONS:

1. Operating Radius: Horizontal distance from a projection of the axis of rotation to the supporting surface before loading to the center of the vertical hoist line or tackle with load applied.
2. Loaded Boom Angle (Shown in Parenthesis on Main Boom Capacity Chart): is the angle between the boom base section and the horizontal, after lifting the rated load at the rated radius with the rated boom length.
3. Working Area: Areas measured in a circular arc about the center line of rotation as shown on the working area diagram.
4. Freely Suspended Load: Load hanging free with no direct external force applied except by the lift cable.
5. Side Load: Horizontal force applied to the lifted load either on the ground or in the air.

Copyright 2013–2014 National Commission for the Certification of Crane Operators. All rights reserved. LD LCM MOBILE REV 04/14

WEIGHT REDUCTIONS FOR LOAD HANDLING DEVICES

26 FT. FIXED BOOM EXTENSION	
*Erected -	2,750 lb
26 FT. - 45 FT. TELE. BOOM EXTENSION	
*Erected (Retracted) -	3,750 lb
*Erected (Extended) -	5,010 lb

*Reduction of main boom capacities

AUXILIARY BOOM NOSE	105 lb
HOOKBLOCKS and HEADACHE BALLS:	
40 ton, 3 sheave	623 lb+
40 ton, 4 sheave	774 lb+
7.5 ton overhaul ball	369 lb+

+Refer to rating plate for actual weight.

When lifting over boom extension, deduct total weight of all load handling devices reeved over main boom nose directly from boom extension capacity.

NOTE: All load handling devices and boom attachments are considered part of the load and suitable allowances MUST BE MADE for their combined weights. Weights are for furnished equipment.

LINE PULLS AND REEVING INFORMATION

HOISTS	CABLE SPECS.	PERMISSIBLE LINE PULLS	NOMINAL CABLE LENGTH
Main	5/8" (16 mm) 6x37 Class EIPS, IWRC Special Flexible Min. Breaking Strength 41,200 lb	11,640 lb	450 ft.
Main & Aux.	5/8" (16 mm) 35x7 Class Rotation Resistant (Non-rotating) Min. Breaking Strength 61,200 lb	11,640 lb	450 ft.

The approximate weight of 5/8" wire rope is 1.0 lb/ft.

Copyright 2013–2014 National Commission for the Certification of Crane Operators. All rights reserved. LD LCM MOBILE REV 04/14

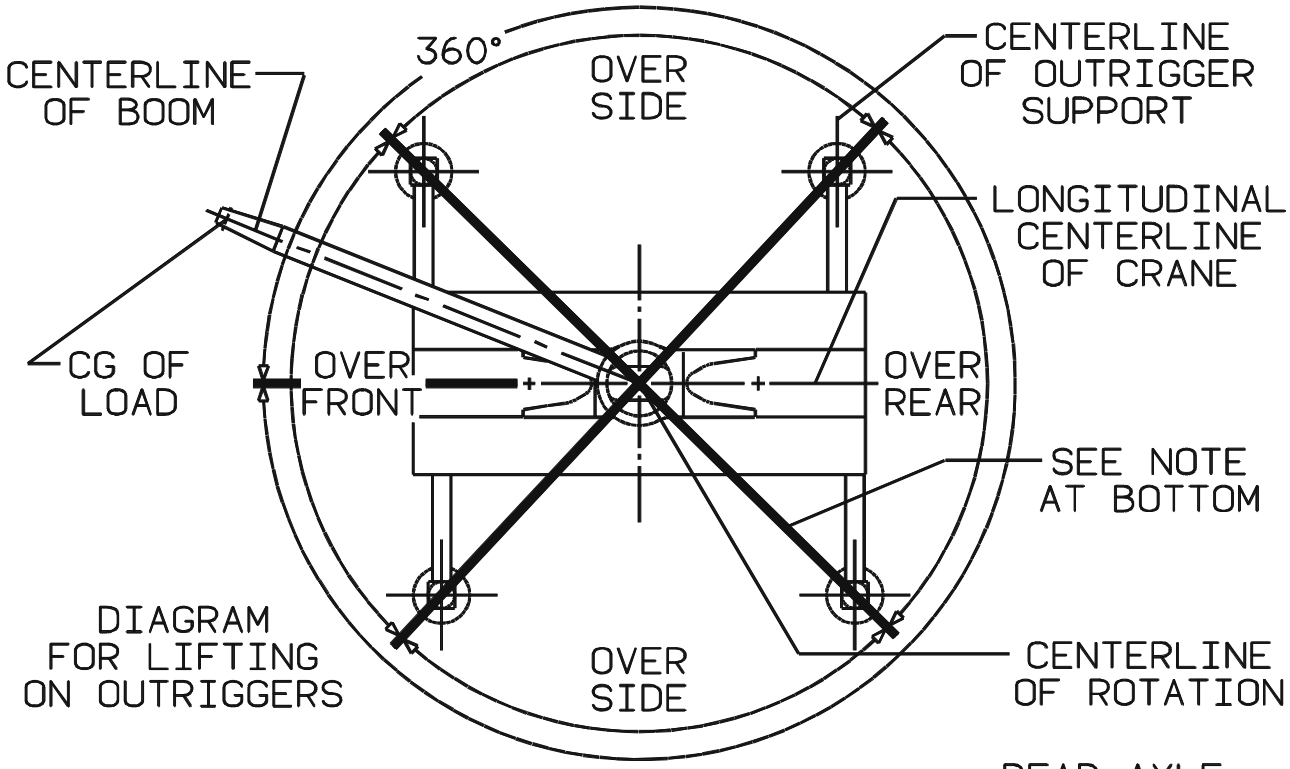

DIAGRAM FOR LIFTING ON OUTRIGGERS

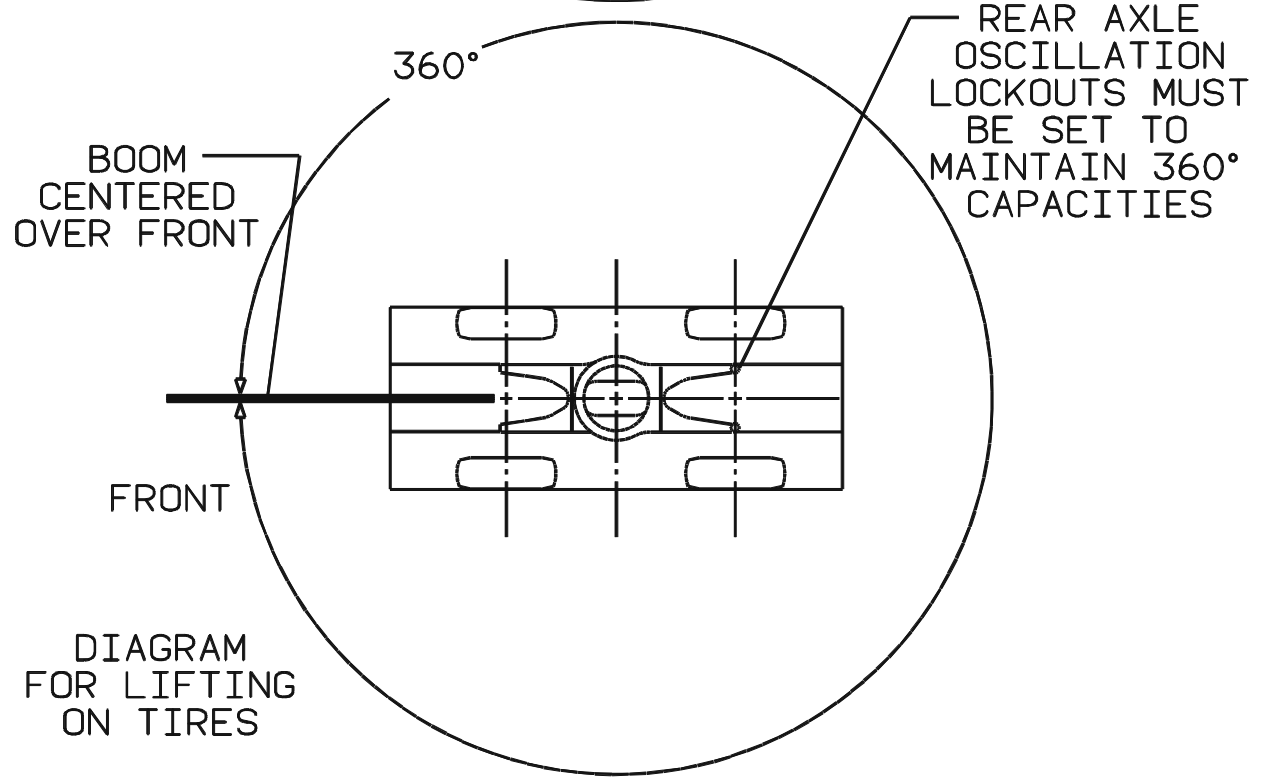

DIAGRAM FOR LIFTING ON TIRES

BOLD LINES DETERMINE THE LIMITING POSITION OF ANY LOAD FOR OPERATION WITHIN WORKING AREAS INDICATED

WORKING AREA DIAGRAM

Copyright 2013–2014 National Commission for the Certification of Crane Operators. All rights reserved. LD LCM MOBILE REV 04/14

WORKING RANGE DIAGRAM

(BOOM DEFLECTION NOT SHOWN)

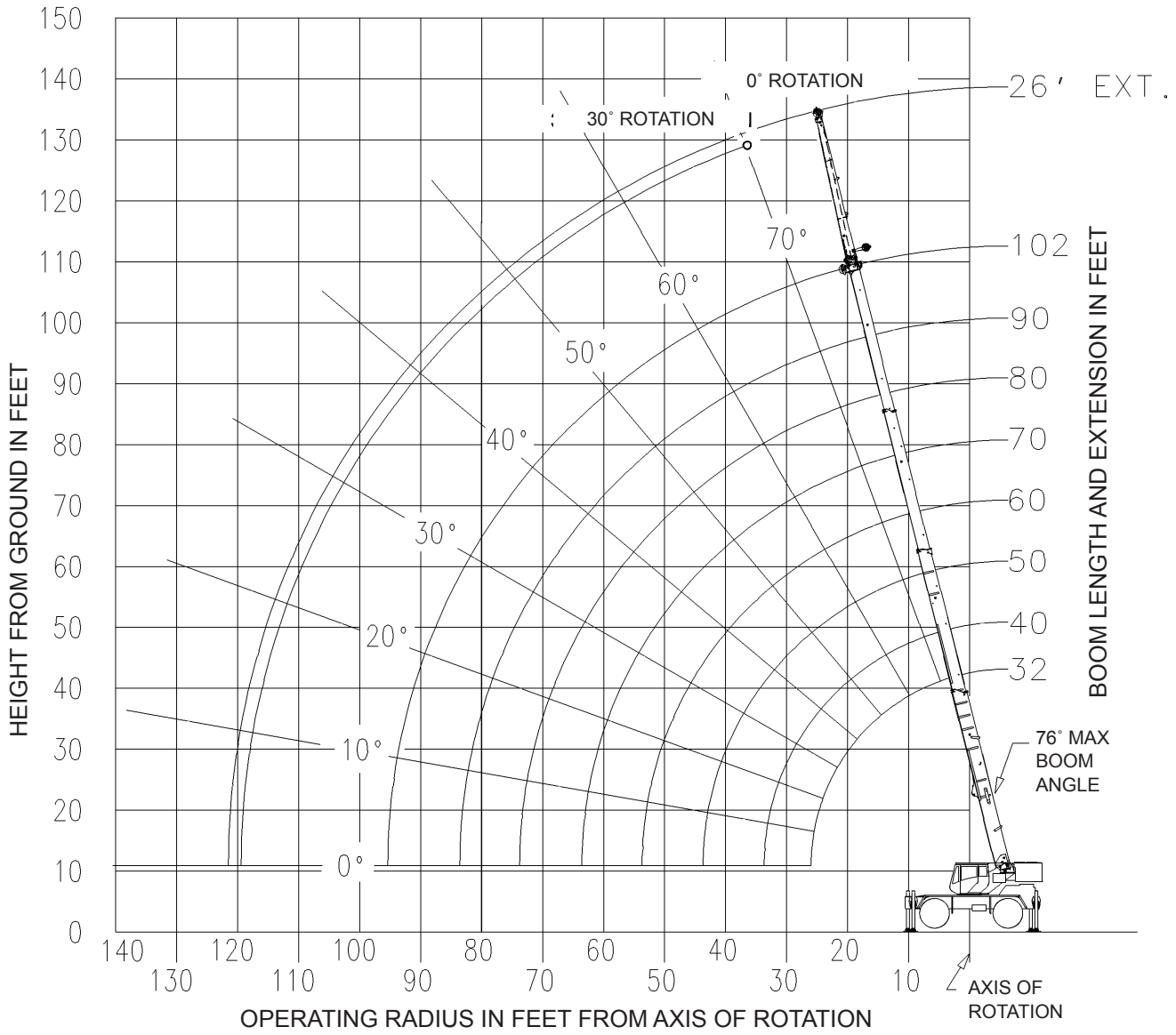

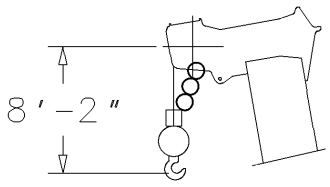

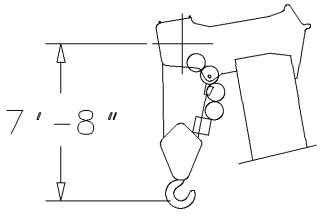

DIMENSIONS ARE FOR LARGEST FURNISHED HOOK BLOCK AND HEADACHE BALL, WITH ANTI-TWO BLOCK ACTIVATED.

Copyright 2013–2014 National Commission for the Certification of Crane Operators. All rights reserved. LD LCM MOBILE REV 04/14

WORKING RANGE DIAGRAM

(BOOM DEFLECTION NOT SHOWN)

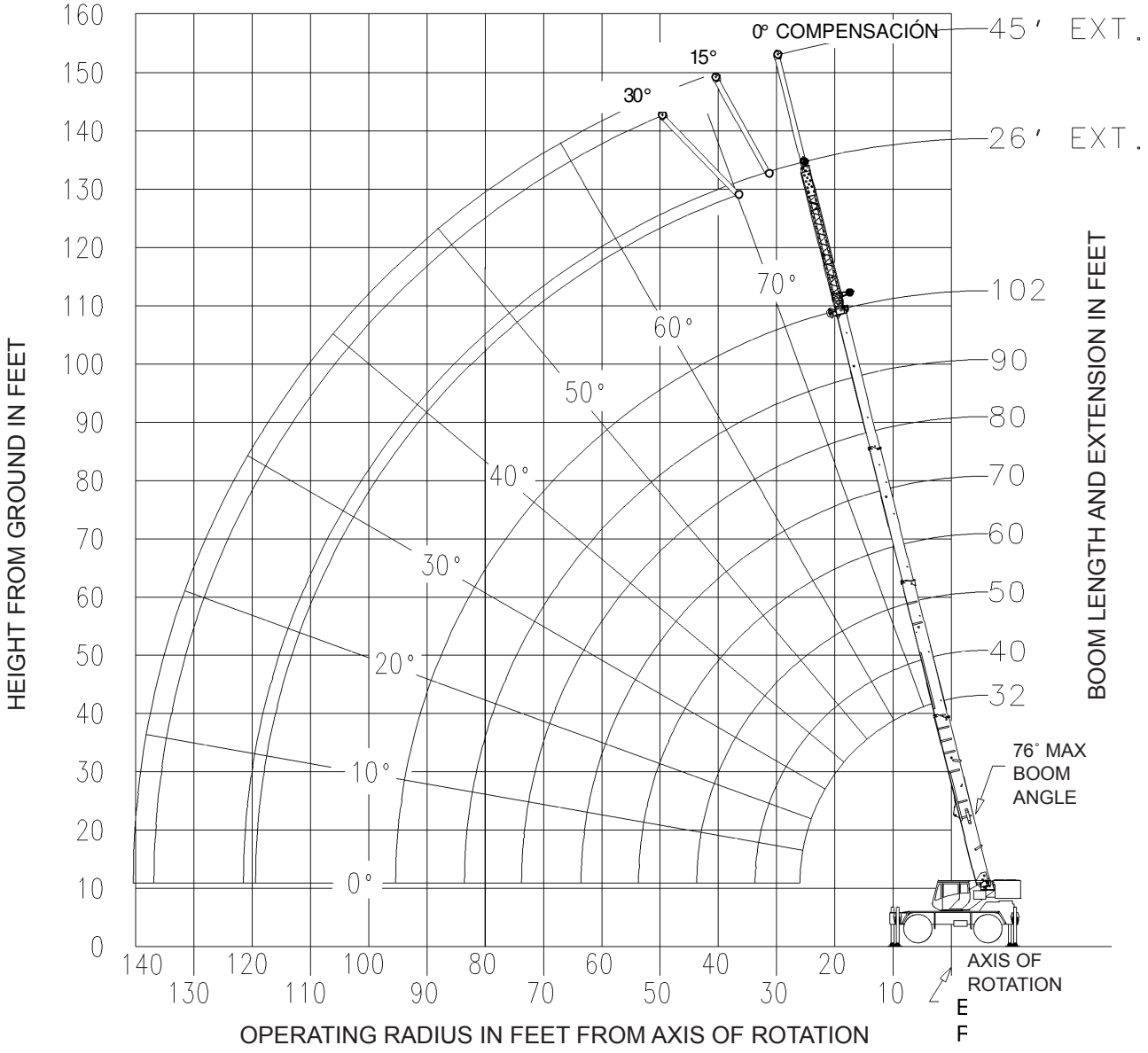

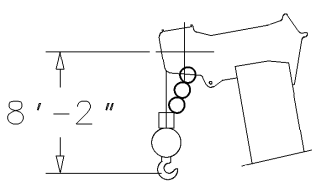

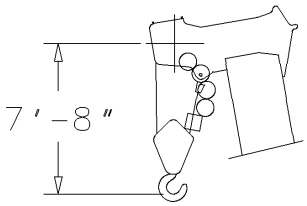

DIMENSIONS ARE FOR LARGEST FURNISHED HOOK BLOCK AND HEADACHE BALL, WITH ANTI-TWO BLOCK ACTIVATED.

Copyright 2013–2014 National Commission for the Certification of Crane Operators. All rights reserved. LD LCM MOBILE REV 04/14

RATED LIFTING CAPACITIES IN POUNDS
32 ft. - 102 ft. BOOM
ON OUTRIGGERS FULLY EXTENDED - 360°

Radius in Feet	#0001							
	Main Boom Length in Feet							
	32	40	50	60	70	80	90	102
8	80,000 (69)							
10	72,200 (65)	50,700 (70.5)	48,500 (75)					
12	61,000 (61)	50,700 (67.5)	48,500 (72.5)	*46,400 (76)				
15	47,950 (54)	48,400 (62.5)	48,500 (69)	44,300 (73)	*38,700 (76)			
20	34,550 (41)	35,000 (53.5)	35,400 (62.5)	31,000 (71.5)	29,700 (74)	*22,000 (76)		
25	26,300 (20.5)	26,800 (43.5)	27,200 (55.5)	27,400 (62.5)	25,800 (67)	24,600 (70.5)		
30		21,250 (30)	21,650 (47.5)	21,850 (56.5)	21,800 (62.5)	20,800 (66.5)	18,350 (69.5)	17,500 (73)
35			17,650 (38.5)	17,900 (50.5)	18,050 (57.5)	17,800 (62.5)	15,600 (66)	15,200 (70)
40	See Note 16		14,400 (26.5)	14,450 (43.5)	14,650 (52.5)	14,800 (58.5)	13,500 (62.5)	13,200 (66.5)
45				11,650 (35)	11,800 (46.5)	11,900 (54)	11,750 (59)	11,600 (63.5)
50				9,480 (24.5)	9,680 (40.5)	9,770 (49)	9,750 (55)	9,790 (60.5)
55					7,970 (33)	8.080 (44)	8,110 (51)	8,130 (57)
60					6,600 (23)	6,720 (38)	6,770 (46.5)	6,800 (53.5)
65						5,590 (31)	5,670 (42)	5,710 (49.5)
70						4,640 (21.5)	4,740 (36)	4,800 (45.5)
75							3,940 (29.5)	4,040 (41)
80							3,250 (21)	3,360 (36)
85								2,770 (30.5)
90								2,250 (23)
95								1,800 (9.5)
Minimum boom angle (°) for indicated length (no load)								0
Maximum boom length (m) at 0° boom angle (no load)								102

NOTE: ( ) Boom angles are in degrees.
#LMI operating code. Refer to LMI manual for operating instructions.
*This capacity is based on maximum boom angle.

Lifting Capacities at Zero Degree Boom Angle								
Boom Angle	Main Boom Length in Feet							
	32	40	50	60	70	80	90	102
0°	29,950 (26)	18,100 (33.8)	12,150 (43.8)	8,180 (53.8)	5,740 (63.8)	4,030 (73.8)	2,800 (83.8)	1,760 (95.5)

NOTE: ( ) Reference radii in meters. A6-829-104283

Copyright 2013–2014 National Commission for the Certification of Crane Operators. All rights reserved. LD LCM MOBILE REV 04/14

26 FT. FIXED OFFSETTABLE BOOM EXTENSION ON OUTRIGGERS FULLY EXTENDED - 360°

Radius in Feet	26 FT. LENGTH	
	#0051	**#0053**
	0° OFFSET	30° OFFSET
35	*8,200 (76)	
40	8,200 (72.5)	
45	8,200 (70)	*5,780 (76)
50	8,150 (67.5)	5,780 (72.5)
55	7,500 (65)	5,450 (70)
60	6,440 (62.5)	4,910 (67.5)
65	5,460 (60)	4,450 (64.5)
70	4,620 (57.5)	4,050 (62)
75	3,900 (54.5)	3,670 (59)
80	3,260 (51.5)	3,350 (56)
85	2,710 (48.5)	3,100 (53)
90	2,210 (45)	2,580 (49.5)
95	1,770 (41.5)	2,080 (46)
100	1,380 (38)	1,620 (41.5)
105	1,020 (33.5)	1,200 (37)
Min. boom angle for indicated length (no load)	32°	36°
Max. boom length at 0° boom angle (no load)	80 feet	

A6-829-104329

BOOM EXTENSION CAPACITY NOTES:

1. All capacities above the bold line are based on structural strength of boom extension.
2. 26 ft. fixed extension length may be used for single line lifting service.
3. Radii listed are for a fully extended boom with the boom extension erected. For main boom lengths less than fully extended, the rated loads are determined by boom angle. Use only the column which corresponds to the boom extension length and offset for which the machine is configured. For boom angles not shown, use the rating of the next lower boom angle.

   WARNING: Operation of this machine with heavier loads than the capacities listed is strictly prohibited. Machine tipping with boom extension occurs rapidly and without advance warning.
4. Boom angle is the angle above or below horizontal of the longitudinal axis of the boom base section after lifting rated load.
5. Capacities listed are with outriggers properly extended and vertical jacks set only.
6. When lifting over the main boom nose with 26 ft. fixed extension erected, the outriggers must be fully extended or 50% extended (14 ft. spread).

NOTE: ( ) Boom angles are in degrees.
#LMI operating code. Refer to LMI manual for instructions.
*This capacity based on maximum boom angle.

Copyright 2013–2014 National Commission for the Certification of Crane Operators. All rights reserved. LD LCM MOBILE REV 04/14

26 FT. - 45 FT. TELE OFFSETTABLE BOOM EXTENSION ON OUTRIGGERS FULLY EXTENDED - 360°

Radius in Feet	26 ft. LENGTH			45 ft. LENGTH		
	#0021	**#0022**	**#0023**	**#0041**	**#0042**	**#0043**
	0° OFFSET	15° OFFSET	30° OFFSET	0° OFFSET	15° OFFSET	30° OFFSET
35	*10,200 (76)					
40	9,460 (72.5)	*7,770 (76)		*5,250 (76)		
45	8,760 (70)	7,370 (72)	*6,030 (76)	5,250 (73.5)		
50	8,150 (67.5)	6,870 (69.5)	5,780 (72.5)	5,050 (71.5)	3,660 (76)	
55	7,510 (65)	6,050 (67)	5,520 (70)	4,650 (69.5)	3,540 (72.5)	
60	6,700 (62.5)	5,350 (64.5)	5,290 (67.5)	4,290 (67)	3,430 (70.5)	*3,000 (76)
65	5,990 (60)	4,740 (62)	4,810 (64.5)	4,000 (65)	3,320 (68.5)	2,890 (72.5)
70	5,240 (57.5)	4,210 (59)	4,270 (62)	3,800 (63)	3,220 (66)	2,790 (70.5)
75	4,400 (54.5)	3,750 (56)	3,800 (59)	3,650 (60.5)	3,130 (64)	2,700 (68)
80	3,670 (51.5)	3,330 (53.5)	3,380 (56)	3,520 (58.5)	3,000 (61.5)	2,620 (65.5)
85	3,050 (48.5)	2,960 (50.5)	3,010 (53)	3,360 (56)	2,880 (59)	2,550 (63)
90	2,500 (45)	2,590 (47)	2,670 (49.5)	3,030 (53.5)	2,770 (56.5)	2,480 (60.5)
95	2,020 (41.5)	2,130 (43.5)	2,270 (46)	2,640 (51)	2,680 (54)	2,410 (57.5)
100	1,590 (38)	1,680 (40)	1,790 (41.5)	2,270 (48)	2,570 (51.5)	2,380 (55)
105	1,200 (33.5)	1,280 (35.5)	1,360 (37)	1,930 (45.5)	2,260 (48.5)	2,310 (52)
110				1,630 (42.5)	1,890 (45.5)	2,030 (48.5)
115				1,330 (39)	1,550 (42)	1,700 (45)
120				1,040 (35.5)	1,240 (38.5)	1,400 (41)
125						1,080 (36.5)
Min. boom angle for indicated length (no load)	29°	30.5°	36°	34°	34.5°	35°
Max. boom length at 0° boom angle (no load)	80 ft.			80 ft.		

NOTE: ( ) Boom angles are in degrees.
#LMI operating code. Refer to LMI manual for instructions.
*This capacity based on maximum boom angle.

BOOM EXTENSION CAPACITY NOTES:

1. All capacities above the bold line are based on structural strength of boom extension.
2. 26 ft. and 45 ft. tele extension lengths may be used for single line lifting service.
3. Radii listed are for a fully extended boom with the boom extension erected. For main boom lengths less than fully extended, the rated loads are determined by boom angle. Use only the column which corresponds to the boom extension length and offset for which the machine is configured. For boom angles not shown, use the rating of the next lower boom angle.

   WARNING: Operation of this machine with heavier loads than the capacities listed is strictly prohibited. Machine tipping with boom extension occurs rapidly and without advance warning.
4. Boom angle is the angle above or below horizontal of the longitudinal axis of the boom base section after lifting rated load.
5. Capacities listed are with outriggers properly extended and vertical jacks set only.
6. When lifting over the main boom nose with 26 ft. or 45 ft. tele extension erected, the outriggers must be fully extended or 50% extended (14' spread).

Copyright 2013–2014 National Commission for the Certification of Crane Operators. All rights reserved. LD LCM MOBILE REV 04/14

ON RUBBER CAPACITIES

STATIONARY CAPACITIES - 360°

Radius in Feet	#9005			
	Main Boom Length in Feet			
	32	40	50	60
10	24,050 (65)	24,100 (70.5)	23,000 (76)	
12	21,600 (61)	22,050 (67.5)	21,600 (72.5)	
15	15,250 (54)	15,550 (62.5)	16,100 (68.5)	13,900 (72.5)
20	9,110 (41)	9,380 (53.5)	9,860 (62)	9,860 (67.5)
25	5,790 (20)	6,050 (43)	6,400 (55)	6,510 (62)
30		3,970 (29.5)	4,240 (47.5)	4,370 (56)
35			2,770 (38)	2,900 (50)
40			1,690 (26)	1,840 (43)
45				1,030 (34.5)
Minimum boom angle (°) for indicated length (no load)				33
Maximum boom length (m) at 0° boom angle (no load)				50

NOTE: ( ) Boom angles are in degrees.
#LMI operating code. Refer to LMI manual for operating instructions.

Lifting Capacities at Zero Degree Boom Angle				
Boom Angle	Main Boom Length in Feet			
	32	40	50	
0°	5,290 (26)	2,850 (33.8)	1,060 (43.8)	

NOTE: ( ) Reference radii in meters.

Copyright 2013–2014 National Commission for the Certification of Crane Operators. All rights reserved. LD LCM MOBILE REV 04/14

ON RUBBER CAPACITIES (cont'd)

PICK & CARRY CAPACITIES (UP TO 2.5 mph) - BOOM CENTERED OVER FRONT (See note 6)

Radius in Feet	#9006			
	Main Boom Length in Feet			
	32	40	50	60
10	27,150 (65)	26,900 (70.5)		
12	23,350 (61)	23,250 (67.5)		
15	18,950 (54)	19,100 (62.5)	19,400 (69)	
20	13,700 (41)	14,200 (53.5)	14,500 (62.5)	14,550 (67.5)
25	10,100 (20)	10,750 (43.5)	11,150 (55.5)	11,200 (62)
30		8,290 (30)	8,620 (47.5)	8,790 (56.5)
35			6,710 (38.5)	6,890 (50)
40			5,210 (26.5)	5,390 (43)
45				4,180 (35)
50				3,190 (24)
Minimum boom angle (°) for indicated length (no load)				0
Maximum boom length (ft.) at 0° boom angle (no load)				60

NOTE: ( ) Boom angles are in degrees.
#LMI operating code. Refer to LMI manual for operating instructions.

Lifting Capacities at Zero Degree Boom Angle				
Boom Angle	Main Boom Length in Feet			
	32	40	50	60
0°	9,520 (26)	6,830 (33.8)	4,280 (43.8)	2,560 (53.8)

NOTE: ( ) Reference radii in feet.

NOTES TO ALL RUBBER CAPACITY CHARTS

1. Capacities are in pounds and do not exceed 75% of tipping loads as determined by test in accordance with SAE J765.
2. Capacities are applicable to machines equipped with 20.5x25 (24 ply) tires at 75 PSI cold inflation pressure, and 16.00x25 (28 ply) tires at 100 PSI cold inflation pressure.
3. Capacities appearing above the bold line are based on structural strength and tipping should not be relied upon as a capacity limitation.
4. Capacities are applicable only with machine on firm level surface.
5. On rubber lifting with boom extensions not permitted.
6. For pick and carry operation, boom must be centered over front of machine, mechanical swing lock engaged and load restrained from swinging. When handling loads in the structural range with capacities close to maximum ratings, travel should be reduced to creep speeds.
7. Axle lockouts must be functioning when lifting on rubber.
8. All lifting depends on proper tire inflation, capacity and condition. Capacities must be reduced for lower tire inflation pressures. See lifting capacity chart for tire used. Damaged tires are hazardous to safe operation of crane.
9. Creep - not over 200 feet of movement in any 30 minute period and not exceeding 1 mph.

Copyright 2013–2014 National Commission for the Certification of Crane Operators. All rights reserved. LD LCM MOBILE REV 04/14

RATED LIFTING CAPACITIES IN POUNDS
32 FT. - 102 FT. BOOM
ON OUTRIGGERS 50% EXTENDED (14 ft. spread) - 360°

Radius in Feet	#4001							
	Main Boom Length in Feet							
	32	40	50	60	70	80	90	102
8	77,000 (69)							
10	66,250 (65)	50,700 (70.5)	48,500 (75)					
12	57,950 (61)	50,700 (67.5)	48,500 (72.5)	*46,400 (76)				
15	46,300 (54)	44,200 (62.5)	41,800 (69)	39,550 (73)	*37,550 (76)			
20	27,100 (41)	27,700 (53.5)	27,050 (62.5)	25,950 (67.5)	24,950 (71.5)	24,000 (74)	*22,000 (76)	
25	17,650 (20.5)	18,250 (43.5)	18,500 (55.5)	18,450 (62.5)	18,050 (67)	17,450 (70.5)	16,950 (73)	*16,350 (76)
30		12,850 (30)	13,200 (47.5)	13,300 (56.5)	13,550 (62.5)	13,250 (66.5)	12,950 (69.5)	12,500 (73)
35	See Note 16		9,790 (38.5)	9,910 (50.5)	10,150 (57.5)	10,250 (62.5)	10,100 (66)	9,830 (70)
40			7,400 (26.5)	7,520 (43.5)	7,770 (52.5)	7,910 (58.5)	7,950 (62.5)	7,820 (66.5)
45				5,760 (35)	5,970 (46.5)	6,150 (54)	6,180 (59)	6,190 (63.5)
50				4,410 (24.5)	4,590 (40.5)	4,750 (49)	4,820 (55)	4,850 (60.5)
55					3,500 (33)	3,630 (44)	3,710 (51)	3,780 (57)
60					2,610 (23)	2,730 (38)	2,810 (46.5)	2,890 (53.5)
65						1,980 (31)	2,070 (42)	2,150 (49.5)
70						1,350 (21.5)	1,440 (36)	1,530 (45.5)
75								1,000 (41)
Minimum boom angle (°) for indicated length (no loa d)						0	21	36
Maximum boom length (ft.) at 0° boom angle (no load)						80		

NOTE: ( ) Boom angles are in degrees.
#LMI operating code. Refer to LMI manual for operating instructions.
*This capacity is based on maximum boom angle.

Lifting Capacities at Zero Degree Boom Angle								
Boom Angle	Main Boom Length in Feet							
	32	40	50	60	70			
0°	16,300 (26)	10,150 (33.8)	6,030 (43.8)	3,580 (53.8)	2,050 (63.8)			

NOTE: ( ) Reference radii in feet.

Copyright 2013–2014 National Commission for the Certification of Crane Operators. All rights reserved. LD LCM MOBILE REV 04/14

26 FT. FIXED OFFSETTABLE EXTENSION

ON OUTRIGGERS 50% EXTENDED (14 ft. spread) - 360°

Radius in Feet	26 ft. LENGTH	
	#4051	**#4053**
	0° OFFSET	30° OFFSET
35	*8,200 (76)	
40	7,240 (72.5)	
45	5,780 (70)	*5,780 (76)
50	4,610 (67.5)	5,740 (72.5)
55	3,650 (65)	4,650 (70)
60	2,850 (62.5)	3,720 (67.5)
65	2,140 (60)	2,900 (64.5)
70	1,540 (57.5)	2,210 (62)
75	1,030 (54.5)	1,620 (59)
80		1,100 (56)
Min. boom angle for indicated length (no load)	51.5°	53°
Max. boom length at 0° boom angle (no load)	60 ft.	

NOTE: ( ) Boom angles are in degrees.
#LMI operating code. Refer to LMI manual for instructions.
*This capacity based on maximum boom angle.

BOOM EXTENSION CAPACITY NOTES:

1. All capacities above the bold line are based on structural strength of boom extension.
2. 26 ft. fixed extension length may be used for single line lifting service.
3. Radii listed are for a fully extended boom with the boom extension erected. For main boom lengths less than fully extended, the rated loads are determined by boom angle. Use only the column which corresponds to the boom extension length and offset for which the machine is configured. For boom angles not shown, use the rating of the next lower boom angle.

   WARNING: Operation of this machine with heavier loads than the capacities listed is strictly prohibited. Machine tipping with boom extension occurs rapidly and without advance warning.
4. Boom angle is the angle above or below horizontal of the longitudinal axis of the boom base section after lifting rated load.
5. Capacities listed are with outriggers properly extended and vertical jacks set only.
6. When lifting over the main boom nose with 26 ft. fixed extension erected, the outriggers must be fully extended or 50% extended (14' spread).

Copyright 2013–2014 National Commission for the Certification of Crane Operators. All rights reserved. LD LCM MOBILE REV 04/14

26 FT. - 45 FT. TELE BOOM EXTENSION

ON OUTRIGGERS 50% EXTENDED (14 ft. spread) - 360°

Radius in Feet	26 ft. LENGTH			45 ft. LENGTH		
	#4021	**#4022**	**#4023**	**#4041**	**#4042**	**#4043**
	0° OFFSET	15° OFFSET	30° OFFSET	0° OFFSET	15° OFFSET	30° OFFSET
35	*9,120 (76)					
40	7,240 (72.5)	*7,770 (76)		*5,250 (76)		
45	5,780 (70)	6,460 (72)	*6,030 (76)	5,250 (73.5)		
50	4,610 (67.5)	5,200 (69.5)	5,740 (72.5)	5,050 (71.5)	3,660 (76)	
55	3,650 (65)	4,180 (67)	4,650 (70)	4,280 (69.5)	3,540 (72.5)	
60	2,850 (62.5)	3,320 (64.5)	3,720 (67.5)	3,480 (67)	3,430 (70.5)	*3,000 (76)
65	2,140 (60)	2,550 (62)	2,900 (64.5)	2,820 (65)	3,320 (68.5)	2,890 (72.5)
70	1,540 (57.5)	1,900 (59)	2,210 (62)	2,260 (63)	2,880 (66)	2,790 (70.5)
75	1,030 (54.5)	1,350 (56)	1,620 (59)	1,740 (60.5)	2,300 (64)	2,700 (68)
80			1,100 (56)	1,300 (58.5)	1,800 (61.5)	2,240 (65.5)
85					1,360 (59)	1,750 (63)
90						1,320 (60.5)
Min. boom angle for indicated length (no load)	51.5°	53.5°	53°	56°	56.5°	57.5°
Max. boom length at 0° boom angle (no load)	60 ft.			60 ft.		

NOTE: ( ) Boom angles are in degrees.
#LMI operating code. Refer to LMI manual for instructions.
*This capacity based on maximum boom angle.

BOOM EXTENSION CAPACITY NOTES:

1. All capacities above the bold line are based on structural strength of boom extension.
2. 26 ft. and 45 ft. tele extension lengths may be used for single line lifting service.
3. Radii listed are for a fully extended boom with the boom extension erected. For main boom lengths less than fully extended, the rated loads are determined by boom angle. Use only the column which corresponds to the boom extension length and offset for which the machine is configured. For boom angles not shown, use the rating of the next lower boom angle.
   WARNING: Operation of this machine with heavier loads than the capacities listed is strictly prohibited. Machine tipping with boom extension occurs rapidly and without advance warning.
4. Boom angle is the angle above or below horizontal of the longitudinal axis of the boom base section after lifting rated load.
5. Capacities listed are with outriggers properly extended and vertical jacks set only
6. When lifting over the main boom nose with 26 ft. or 45 ft. tele extension erected, the outriggers must be fully extended or 50% extended (14' spread).

Copyright 2013–2014 National Commission for the Certification of Crane Operators. All rights reserved. LD LCM MOBILE REV 04/14

RATED LIFTING CAPACITIES IN POUNDS
32 FT. - 102 FT. BOOM

ON OUTRIGGERS 0% EXTENDED (7.8 ft. spread) - 360°

Radius in Feet	#8001							
	Main Boom Length in Feet							
	32	40	50	60	70	80	90	102
8	51,950 (69)							
10	37,800 (65)	35,900 (70.5)	33,600 (75)					
12	29,050 (61)	28,100 (67.5)	26,600 (72.5)	*25,150 (76)				
15	20,850 (54)	20,450 (62.5)	19,750 (69)	18,850 (73)	*18,000 (76)			
20	12,500 (41)	13,050 (53.5)	12,950 (62.5)	12,600 (67.5)	12,150 (71.5)	11,700 (74)	*11,250 (76)	
25	7,950 (20.5)	8,460 (43.5)	8,700 (55.5)	8,760 (62.5)	8,580 (67)	8,300 (70.5)	8,050 (73)	*7,720 (76)
30		5,610 (30)	5,890 (47.5)	6,000 (56.5)	6,110 (62.5)	5,980 (66.5)	5,840 (69.5)	5,600 (73)
35	See Note 16		3,980 (38.5)	4,090 (50.5)	4,350 (57.5)	4,270 (62.5)	4,200 (66)	4,060 (70)
40			2,600 (26.5)	2,710 (43.5)	2,940 (52.5)	2,970 (58.5)	2,940 (62.5)	2,850 (66.5)
45				1,670 (35)	1,860 (46.5)	1,960 (54)	1,950 (59)	1,890 (63.5)
50					1,020 (40.5)	1,160 (49)	1,160 (55)	1,110 (60.5)
Minimum boom angle (°) for indicated length (no load)				0	33	44	51	57
Maximum boom length (ft.) at 0° boom angle (no load)				60				

NOTE: ( ) Boom angles are in degrees.
#LMI operating code. Refer to LMI manual for operating instructions.
*This capacity is based on maximum boom angle.

Lifting Capacities at Zero Degree Boom Angle								
Boom Angle	Main Boom Length in Feet							
	32	40	50					
0°	7,230 (26)	4,060 (33.8)	1,790 (43.8)					

NOTE: ( ) Reference radii in feet.

Copyright 2013–2014 National Commission for the Certification of Crane Operators. All rights reserved. LD LCM MOBILE REV 04/14

For Use in CCO Written Examinations

LATTICE BOOM CRAWLER CRANE (LBC)

These charts have been adapted from the original manufacturer's charts for use in CCO Written Examinations.

This supplement is not to be used for any other purpose.

Copyright 2013–2014 National Commission for the Certification of Crane Operators (NCCCO). All rights reserved. This document may not be reproduced in whole or in part without express written permission of the manufacturer and the consent of NCCCO.

Liftcrane Boom Capacities

Meets ANSI B30.5 Requirements

Boom No. 22EL
179,100 Lb. Crane Counterweight
44,000 Lb. Carbody Counterweight
360 Degree Rating

LIFTING CAPACITIES: Capacities for various boom lengths and operating radii are for freely suspended loads and do not exceed 75% of a static tipping load. Capacities based on structural competence are denoted by an asterisk (*). Capacities indicated by (b) require 12,500 Lb. minimum weight. Capacities are not shown for boom positions which, without load, provide less than required ANSI B30.5 backward stability.

Upper boom point capacity for liftcrane service with single part whip line is 29,500 Lbs. or 59,000 Lbs. with two part whip line. When boom butt mounted auxiliary drum is used, capacity with single part whip line is 20,000 Lbs. or 40,000 Lbs. with two part whip line. In all cases, upper boom point capacities cannot exceed those listed for main boom capacity.

250 Ft. thru 290 Ft. boom lengths require only the middle two sheaves in lower boom point. All other sheaves must be removed from lower boom point.

Weight of jib, all load blocks, hooks, weight ball, slings, hoist lines, etc., beneath boom and jib point sheaves, is considered part of main boom load. Boom is not to be lowered beyond radii where combined weights are greater than rated capacity. Where no capacity is shown, operation is not intended or approved.

OPERATING CONDITIONS: Machine to operate in a level position on a firm uniformly supporting surface with gantry up. Refer to boom rigging **No. 177156** or **No. 177353** and Wire Rope Specification chart **No. 7810-A**. Crane operator judgment must be used to allow for dynamic load effects of swinging, hoisting or lowering, travel, wind conditions, as well as adverse operating conditions and physical machine depreciation. Refer to operators manual for operating guidelines.

MACHINE TRAVEL: Machine to travel on a firm, level and uniformly supporting surface and boom within boom angle range shown in capacity chart. Refer to Maximum Allowable Travel Specification chart **No. 7808-A**.

OPERATING RADIUS: Operating radius is horizontal distance from axis of rotation to center of vertical hoist line or load block. Boom angle is angle between horizontal and centerline of boom butt and inserts, and is an indication of operating radius. In all cases, operating radius shall govern capacity.

BOOM POINT ELEVATION: Boom point elevation is vertical distance from ground level to centerline of boom point shaft.

MACHINE EQUIPMENT: Machine equipped with 28 Ft. 2 in. extendible crawlers, 48 in. treads, 10 Ft. 3 in. retractable gantry, 30 Ft. live mast, 20 part boom hoist reeving, four 1-3/8 in. boom pendants, 179,100 Lb. crane counterweight and 44,000 Lb. carbody counterweight.

Maximum capacity on 26 mm OR 1" wire rope is 29,500 lbs. per line (20,000 lbs. when auxiliary drum is used).

Deduct From Capacities When Jib Is Attached	
Jib Length	Jib No. 134
30 Ft.	2,700 Lbs.
40 Ft.	3,500 Lbs.
50 Ft.	4,300 Lbs.
60 Ft.	5,100 Lbs.
70 Ft.	6,100 Lbs.
80 Ft.	7,100 Lbs.

Maximum Boom and Jib Lengths Lifted Unassisted

Over Front of Blocked Crawlers		Over Rear of Blocked Crawlers		Over Side of Extended Crawlers		Over Side of Retracted Crawlers	
Boom Length	Jib No. 134	Boom Length	Jib No. 134	Boom Length	Jib No. 134	Boom Length	Jib No. 134
(a) 290 Ft.	—	(a) 280 Ft.	—	(a) 260 Ft.	—	230 Ft.	—
280 Ft.	—	270 Ft.	—	250 Ft.	—	220 Ft.	30 Ft.
270 Ft.	—	260 Ft.	40 Ft.	240 Ft.	—	210 Ft.	60 Ft.
260 Ft.	50 Ft.	250 Ft.	70 Ft.	230 Ft.	50 Ft.	200 Ft.	80 Ft.
250 Ft.	80 Ft.	240 Ft.	80 Ft.	220 Ft.	80 Ft.		

Load block, hook and weight ball on ground at start. (a) Upper boom point cannot be used on 290 Ft. boom and cannot be lifted over rear of blocked crawlers on 280 Ft. boom or side of extended crawlers on 260 Ft. boom.

Consult jib chart for jib capacities. Upper boom point cannot be used when jib is attached.

Copyright 2013–2014 National Commission for the Certification of Crane Operators. All rights reserved. LD LCM MOBILE REV 04/14

Liftcrane Boom Capacities

Meets ANSI B30.5 Requirements

Boom No. 22EL
179,100 Lb. Crane Counterweight
44,000 Lb. Carbody Counterweight
360 Degree Rating

Oper. Rad. Feet	Boom Ang. Deg.	Boom Point Elev. Feet	Boom Capacity Crawlers Retracted Pounds	Boom Capacity Crawlers Extended Pounds
70 Ft. Boom				
16	82.8	77.2		441,000 ***b**
17	82.0	77.1		408,300 ***b**
18	81.1	76.9		386,800 ***b**
19	80.3	76.7		367,400 ***b**
20	79.5	76.5		349,800 ***b**
22	77.8	76.0		319,000 ***b**
24	76.1	75.5		293,000 ***b**
26	74.4	74.9		270,700 *
28	72.7	74.2		251,400 *
30	70.9	73.5		234,400 *
32	69.2	72.7		219,000
34	67.4	71.8		199,600
36	65.6	70.9		183,200
38	63.7	69.8		169,100
40	61.9	68.7		156,900
42	60.0	67.5		146,200
44	58.0	66.2		136,800
46	56.0	64.8	109,400	128,400
48	54.0	63.4	103,100	120,900
50	51.9	61.7	97,500	114,100
55	46.3	57.1	85,500	99,800
60	40.1	51.4	75,700	88,300
65	32.9	44.2	67,700	78,900
70	23.7	34.1	60,800	70,900
80 Ft. Boom				
17	83.0	87.2		405,400 ***b**
18	82.3	87.0		386,000 ***b**
19	81.5	86.9		366,700 ***b**
20	80.8	86.7		349,100 ***b**
22	79.3	86.3		318,300 ***b**
24	77.9	85.8		292,200 ***b**
26	76.4	85.3		270,000 *
28	74.9	84.7		250,600 *
30	73.4	84.1		233,700 *
32	71.9	83.4		218,800 *
34	70.4	82.7		199,800
36	68.8	81.9		183,400
38	67.3	81.0		169,300
40	65.7	80.0		157,000
42	64.1	79.0		146,300
44	62.4	78.0	116,200	136,900
46	60.8	76.8	109,300	128,500
48	59.1	75.6	103,100	120,900
50	57.4	74.3	97,400	114,200
55	52.9	70.6	85,400	99,800
60	48.2	66.2	75,700	88,300
65	43.0	61.0	67,600	78,900
70	37.3	54.8	60,900	71,000
75	30.6	46.9	55,100	64,300
80	22.0	36.0	50,000	58,500

Oper. Rad. Feet	Boom Ang. Deg.	Boom Point Elev. Feet	Boom Capacity Crawlers Retracted Pounds	Boom Capacity Crawlers Extended Pounds
90 Ft. Boom				
19	82.5	97.0		365,000 ***b**
20	81.8	96.8		348,600 ***b**
22	80.5	96.5		317,800 ***b**
24	79.2	96.1		291,800 ***b**
26	77.9	95.6		269,500 *
28	76.6	95.1		250,200 *
30	75.3	94.6		233,300 *
32	74.0	94.0		218,400 *
34	72.6	93.3		200,100
36	71.3	92.6		183,600
38	69.9	91.8		169,400
40	68.6	91.0		157,200
42	67.2	90.1	124,000	146,400
44	65.8	89.2	116,300	137,000
46	64.3	88.2	109,300	128,500
48	62.9	87.2	103,100	121,000
50	61.4	86.0	97,400	114,200
55	57.7	82.9	85,400	99,900
60	53.8	79.3	75,700	88,400
65	49.6	75.2	67,600	79,000
70	45.2	70.4	60,900	71,100
75	40.4	64.7	55,200	64,400
80	35.0	57.9	50,200	58,700
85	28.7	49.4	45,800	53,600
90	20.7	37.7	41,900	49,200

Copyright 2013–2014 National Commission for the Certification of Crane Operators. All rights reserved. LD LCM MOBILE REV 04/14

Liftcrane Boom Capacities

Meets ANSI B30.5 Requirements

Boom No. 22EL
179,100 Lb. Crane Counterweight
44,000 Lb. Carbody Counterweight
360 Degree Rating

Oper. Rad. Feet	Boom Ang. Deg.	Boom Point Elev. Feet	Boom Capacity Crawlers Retracted Pounds	Boom Capacity Crawlers Extended Pounds
100 Ft. Boom				
20	82.7	107.0		348,200 ***b**
22	81.5	106.6		317,500 ***b**
24	80.3	106.3		291,500 ***b**
26	79.2	105.9		269,200 *
28	78.0	105.4		249,900 *
30	76.8	104.9		233,000 *
32	75.6	104.4		218,100 *
34	74.4	103.8		200,200
36	73.2	103.2		183,700
38	72.0	102.5		169,600
40	70.8	101.8		157,300
42	69.6	101.0	124,100	146,600
44	68.3	100.2	116,300	137,100
46	67.1	99.3	109,400	128,600
48	65.8	98.4	103,100	121,100
50	64.6	97.4	97,500	114,300
55	61.3	94.7	85,400	100,000
60	57.9	91.6	75,700	88,500
65	54.4	88.1	67,700	79,100
70	50.8	84.1	61,000	71,200
75	46.9	79.5	55,300	64,500
80	42.7	74.3	50,300	58,800
85	38.2	68.1	46,000	53,800
90	33.1	60.8	42,200	49,400
95	27.2	51.7	38,800	45,500
100	19.5	39.4	35,700	42,000

Oper. Rad. Feet	Boom Ang. Deg.	Boom Point Elev. Feet	Boom Capacity Crawlers Retracted Pounds	Boom Capacity Crawlers Extended Pounds
110 Ft. Boom				
22	82.3	116.8		316,900 *
24	81.2	116.4		290,900 *
26	80.2	116.1		268,600 *
28	79.1	115.7		249,300 *
30	78.0	115.2		232,400 *
32	77.0	114.7		217,500 *
34	75.9	114.2		200,300
36	74.8	113.6		183,700
38	73.7	113.0		169,600
40	72.6	112.4	132,800	157,300
42	71.5	111.7	124,000	146,500
44	70.4	110.9	116,200	137,000
46	69.3	110.2	109,200	128,500
48	68.2	109.3	103,000	121,000
50	67.0	108.5	97,300	114,200
55	64.1	106.1	85,200	99,800
60	61.2	103.4	75,500	88,300
65	58.1	100.3	67,500	78,900
70	55.0	96.8	60,800	71,000
75	51.7	93.0	55,000	64,300
80	48.2	88.6	50,100	58,600
85	44.5	83.6	45,800	53,600
90	40.6	77.9	42,000	49,300
95	36.3	71.4	38,600	45,400
100	31.5	63.6	35,600	41,900
105	25.8	54.0	32,800	38,800
110	18.6	40.9	30,300	36,000

Copyright 2013–2014 National Commission for the Certification of Crane Operators. All rights reserved. LD LCM MOBILE REV 04/14

Liftcrane Boom Capacities

Meets ANSI B30.5 Requirements

Boom No. 22EL
179,100 Lb. Crane Counterweight
44,000 Lb. Carbody Counterweight
360 Degree Rating

Oper. Rad. Feet	Boom Ang. Deg.	Boom Point Elev. Feet	Boom Capacity Crawlers Retracted Pounds	Boom Capacity Crawlers Extended Pounds
120 Ft. Boom				
22	82.9	126.9		309,900 *
24	82.0	126.6		290,400 *
26	81.0	126.2		268,100 *
28	80.0	125.9		248,800 *
30	79.1	125.5		232,000 *
32	78.1	125.0		217,100 *
34	77.1	124.5		200,300
36	76.1	124.0		183,700
38	75.1	123.5	142,600	169,500
40	74.1	122.9	132,700	157,200
42	73.1	122.2	123,900	146,400
44	72.1	121.6	116,100	136,900
46	71.1	120.9	109,100	128,500
48	70.1	120.1	102,800	120,900
50	69.1	119.3	97,200	114,100
55	66.5	117.2	85,100	99,700
60	63.8	114.7	75,400	88,200
65	61.1	112.0	67,300	78,800
70	58.3	109.0	60,600	70,900
75	55.4	105.6	54,900	64,200
80	52.4	101.8	50,000	58,500
85	49.3	97.5	45,700	53,500
90	46.0	92.8	41,900	49,200
95	42.5	87.5	38,500	45,300
100	38.7	81.4	35,500	41,900
105	34.6	74.4	32,800	38,800
110	30.0	66.2	30,400	36,000
115	24.7	56.1	28,100	33,500
120	17.7	42.4	26,000	31,100

Oper. Rad. Feet	Boom Ang. Deg.	Boom Point Elev. Feet	Boom Capacity Crawlers Retracted Pounds	Boom Capacity Crawlers Extended Pounds
130 Ft. Boom				
24	82.6	136.7		285,200 *
26	81.7	136.4		267,800 *
28	80.8	136.0		248,600 *
30	79.9	135.7		231,700 *
32	79.0	135.3		216,800 *
34	78.1	134.8		200,400
36	77.2	134.3	154,100	183,800
38	76.3	133.8	142,600	169,600
40	75.4	133.3	132,700	157,300
42	74.5	132.7	123,900	146,500
44	73.5	132.1	116,100	137,000
46	72.6	131.5	109,100	128,500
48	71.7	130.8	102,800	120,900
50	70.7	130.1	97,100	114,100
55	68.4	128.1	85,100	99,700
60	66.0	125.9	75,300	88,200
65	63.5	123.4	67,300	78,800
70	61.0	120.7	60,600	70,900
75	58.4	117.6	54,900	64,200
80	55.8	114.3	49,900	58,500
85	53.0	110.6	45,600	53,500
90	50.2	106.5	41,900	49,200
95	47.2	101.9	38,500	45,300
100	44.0	96.8	35,500	41,900
105	40.7	91.2	32,800	38,800
110	37.1	84.8	30,400	36,100
115	33.2	77.4	28,200	33,500
120	28.8	68.7	26,100	31,200
125	23.6	58.1	24,300	29,100
130	17.0	43.8	22,500	27,100

Copyright 2013–2014 National Commission for the Certification of Crane Operators. All rights reserved. LD LCM MOBILE REV 04/14

Liftcrane Boom Capacities

Meets ANSI B30.5 Requirements

Boom No. 22EL
179,100 Lb. Crane Counterweight
44,000 Lb. Carbody Counterweight
360 Degree Rating

Oper. Rad. Feet	Boom Ang. Deg.	Boom Point Elev. Feet	Boom Capacity Crawlers Retracted Pounds	Boom Capacity Crawlers Extended Pounds
140 Ft. Boom				
26	82.3	146.5		267,300 *
28	81.5	146.2		248,000 *
30	80.6	145.8		231,200 *
32	79.8	145.5		216,300 *
34	79.0	145.1	167,100	200,300
36	78.1	144.6	153,900	183,700
38	77.3	144.1	142,500	169,400
40	76.4	143.6	132,500	157,100
42	75.6	143.1	123,700	146,300
44	74.7	142.5	115,900	136,800
46	73.9	141.9	108,900	128,300
48	73.0	141.3	102,600	120,700
50	72.2	140.7	96,900	113,900
55	70.0	138.9	84,900	99,500
60	67.8	136.8	75,100	88,000
65	65.5	134.6	67,100	78,500
70	63.3	132.1	60,400	70,700
75	60.9	129.3	54,600	64,000
80	58.5	126.3	49,700	58,300
85	56.1	123.0	45,400	53,300
90	53.5	119.3	41,600	49,000
95	50.9	115.3	38,300	45,100
100	48.2	110.9	35,300	41,700
105	45.3	106.1	32,600	38,600
110	42.3	100.7	30,200	35,900
115	39.1	94.7	28,000	33,400
120	35.7	87.9	26,000	31,100
125	31.9	80.2	24,100	29,000
130	27.7	71.2	22,400	27,000
135	22.7	60.1	20,800	25,200
140	16.3	45.2	19,300	23,500

Oper. Rad. Feet	Boom Ang. Deg.	Boom Point Elev. Feet	Boom Capacity Crawlers Retracted Pounds	Boom Capacity Crawlers Extended Pounds
150 Ft. Boom				
26	82.8	156.6		244,200 *
28	82.0	156.3		238,700 *
30	81.3	156.0		230,500 *
32	80.5	155.6		215,600 *
34	79.7	155.3	166,900	200,200
36	78.9	154.8	153,700	183,600
38	78.2	154.4	142,300	169,300
40	77.4	153.9	132,300	157,000
42	76.6	153.5	123,400	146,100
44	75.8	152.9	115,600	136,600
46	75.0	152.4	108,600	128,100
48	74.2	151.8	102,300	120,500
50	73.4	151.2	96,600	113,700
55	71.4	149.5	84,500	99,200
60	69.4	147.6	74,800	87,700
65	67.3	145.6	66,700	78,200
70	65.2	143.3	60,000	70,300
75	63.0	140.8	54,200	63,700
80	60.9	138.0	49,300	57,900
85	58.6	135.0	45,000	53,000
90	56.3	131.7	41,200	48,600
95	54.0	128.1	37,900	44,800
100	51.6	124.2	34,900	41,300
105	49.1	119.9	32,200	38,300
110	46.4	115.2	29,800	35,500
115	43.7	110.1	27,600	33,000
120	40.8	104.4	25,600	30,700
125	37.7	98.1	23,700	28,600
130	34.4	91.0	22,000	26,700
135	30.8	82.9	20,500	24,900
140	26.7	73.5	19,000	23,200
145	21.9	62.0	17,600	21,700
150	15.7	46.5	16,300	20,200

Copyright 2013–2014 National Commission for the Certification of Crane Operators. All rights reserved. LD LCM MOBILE REV 04/14

Liftcrane Boom Capacities

Meets ANSI B30.5 Requirements

Boom No. 22EL
179,100 Lb. Crane Counterweight
44,000 Lb. Carbody Counterweight
360 Degree Rating

Oper. Rad. Feet	Boom Ang. Deg.	Boom Point Elev. Feet	Boom Capacity Crawlers Retracted Pounds	Boom Capacity Crawlers Extended Pounds
160 Ft. Boom				
28	82.5	166.4		228,900 *
30	81.8	166.1		223,800 *
32	81.1	165.8	182,200	215,000 *
34	80.4	165.4	166,700	200,100
36	79.6	165.1	153,500	183,400
38	78.9	164.6	142,000	169,100
40	78.2	164.2	132,000	156,700
42	77.4	163.7	123,200	145,900
44	76.7	163.3	115,300	136,400
46	76.0	162.7	108,300	127,900
48	75.2	162.2	102,000	120,300
50	74.5	161.6	96,300	113,400
55	72.6	160.1	84,200	99,000
60	70.7	158.3	74,500	87,400
65	68.8	156.4	66,400	77,900
70	66.8	154.3	59,700	70,000
75	64.9	152.0	53,900	63,400
80	62.9	149.4	49,000	57,600
85	60.8	146.7	44,700	52,700
90	58.7	143.6	40,900	48,300
95	56.6	140.4	37,600	44,500
100	54.4	136.8	34,600	41,000
105	52.1	133.0	31,900	38,000
110	49.8	128.8	29,500	35,200
115	47.4	124.3	27,300	32,700
120	44.9	119.3	25,300	30,400
125	42.2	113.9	23,400	28,300
130	39.4	108.0	21,800	26,400
135	36.5	101.4	20,200	24,600
140	33.3	94.0	18,700	23,000
145	29.8	85.6	17,400	21,500
150	25.8	75.7	16,100	20,000
155	21.2	63.8	14,900	18,700
160	15.2	47.8	13,800	17,400

Oper. Rad. Feet	Boom Ang. Deg.	Boom Point Elev. Feet	Boom Capacity Crawlers Retracted Pounds	Boom Capacity Crawlers Extended Pounds
170 Ft. Boom				
28	83.0	176.5		213,500 *
30	82.3	176.2	200,500	209,400 *
32	81.6	175.9	182,100	205,400 *
34	80.9	175.6	166,600	200,000
36	80.3	175.2	153,400	183,300
38	79.6	174.9	141,900	169,000
40	78.9	174.4	131,900	156,600
42	78.2	174.0	123,000	145,800
44	77.5	173.6	115,200	136,200
46	76.8	173.1	108,200	127,700
48	76.1	172.6	101,900	120,100
50	75.4	172.0	96,200	113,300
55	73.7	170.6	84,100	98,800
60	71.9	168.9	74,300	87,200
65	70.1	167.1	66,200	77,800
70	68.3	165.2	59,500	69,900
75	66.4	163.0	53,800	63,200
80	64.6	160.6	48,800	57,500
85	62.7	158.1	44,500	52,500
90	60.8	155.3	40,700	48,100
95	58.8	152.3	37,400	44,300
100	56.8	149.1	34,400	40,900
105	54.7	145.6	31,700	37,800
110	52.6	141.8	29,300	35,000
115	50.4	137.7	27,100	32,500
120	48.2	133.3	25,100	30,300
125	45.9	128.5	23,300	28,200
130	43.4	123.3	21,600	26,300
135	40.9	117.6	20,000	24,500
140	38.2	111.4	18,600	22,900
145	35.3	104.5	17,200	21,300
150	32.2	96.8	16,000	19,900
155	28.8	88.1	14,800	18,600
160	25.0	77.9	13,700	17,300
165	20.5	65.6	12,600	16,200

Copyright 2013–2014 National Commission for the Certification of Crane Operators. All rights reserved. LD LCM MOBILE REV 04/14

Liftcrane Boom Capacities

Meets ANSI B30.5 Requirements

Boom No. 22EL
179,100 Lb. Crane Counterweight
44,000 Lb. Carbody Counterweight
360 Degree Rating

Oper. Rad. Feet	Boom Ang. Deg.	Boom Point Elev. Feet	Boom Capacity Crawlers Retracted Pounds	Boom Capacity Crawlers Extended Pounds
180 Ft. Boom				
30	82.7	186.3	199,200 *	199,200 *
32	82.1	186.0	181,900	195,500 *
34	81.4	185.7	166,400	191,800 *
36	80.8	185.4	153,100	183,100
38	80.2	185.0	141,600	168,800
40	79.5	184.6	131,600	156,400
42	78.9	184.2	122,700	145,500
44	78.2	183.8	114,900	136,000
46	77.6	183.4	107,900	127,500
48	76.9	182.9	101,600	119,800
50	76.2	182.4	95,900	113,000
55	74.6	181.0	83,700	98,500
60	72.9	179.5	74,000	86,900
65	71.2	177.8	65,900	77,500
70	69.5	175.9	59,200	69,500
75	67.8	173.9	53,400	62,900
80	66.1	171.7	48,500	57,100
85	64.3	169.3	44,200	52,100
90	62.5	166.8	40,400	47,800
95	60.7	164.0	37,000	43,900
100	58.9	161.0	34,100	40,500
105	57.0	157.8	31,400	37,500
110	55.0	154.3	29,000	34,700
115	53.0	150.6	26,800	32,200
120	51.0	146.6	24,800	29,900
125	48.9	142.3	22,900	27,800
130	46.7	137.6	21,300	25,900
135	44.5	132.6	19,700	24,200
140	42.1	127.1	18,300	22,500
145	39.7	121.2	16,900	21,000
150	37.1	114.7	15,700	19,600
155	34.3	107.6	14,500	18,300
160	31.3	99.6	13,400	17,100
165	28.0	90.6	12,400	15,900
170	24.3	80.0	11,400	14,800
175	19.9	67.3	10,500	13,800

Oper. Rad. Feet	Boom Ang. Deg.	Boom Point Elev. Feet	Boom Capacity Crawlers Retracted Pounds	Boom Capacity Crawlers Extended Pounds
190 Ft. Boom				
32	82.5	196.2	181,000 *	181,000 *
34	81.9	195.9	166,200	178,000 *
36	81.3	195.5	152,900	175,000 *
38	80.7	195.2	141,400	168,700
40	80.1	194.8	131,300	156,200
42	79.4	194.4	122,500	145,300
44	78.8	194.0	114,600	135,800
46	78.2	193.6	107,600	127,200
48	77.6	193.2	101,300	119,600
50	77.0	192.7	95,500	112,700
55	75.4	191.4	83,400	98,200
60	73.9	189.9	73,600	86,600
65	72.3	188.4	65,500	77,100
70	70.7	186.6	58,800	69,200
75	69.1	184.7	53,000	62,500
80	67.4	182.7	48,000	56,700
85	65.8	180.4	43,700	51,700
90	64.1	178.0	39,900	47,400
95	62.4	175.4	36,600	43,500
100	60.7	172.6	33,600	40,100
105	58.9	169.6	30,900	37,000
110	57.1	166.4	28,500	34,300
115	55.3	163.0	26,300	31,800
120	53.4	159.3	24,300	29,500
125	51.5	155.4	22,500	27,400
130	49.5	151.2	20,800	25,500
135	47.5	146.7	19,200	23,700
140	45.4	141.8	17,800	22,100
145	43.2	136.5	16,500	20,600
150	40.9	130.9	15,200	19,200
155	38.5	124.7	14,000	17,900
160	36.0	118.0	13,000	16,600
165	33.3	110.6	11,900	15,500
170	30.4	102.3	11,000	14,400
175	27.2	93.0	10,000	13,300
180	23.6	82.1	9,200	12,400
185	19.4	68.9	8,300	11,400

Copyright 2013–2014 National Commission for the Certification of Crane Operators. All rights reserved. LD LCM MOBILE REV 04/14

Liftcrane Boom Capacities

Meets ANSI B30.5 Requirements

Boom No. 22EL
179,100 Lb. Crane Counterweight
44,000 Lb. Carbody Counterweight
360 Degree Rating

Oper. Rad. Feet	Boom Ang. Deg.	Boom Point Elev. Feet	Boom Capacity Crawlers Retracted Pounds	Boom Capacity Crawlers Extended Pounds
200 Ft. Boom				
32	82.9	206.3	171,000 *	171,000 *
34	82.3	206.0	165,900	168,200 *
36	81.7	205.7	152,600	165,400 *
38	81.1	205.3	141,100	162,600 *
40	80.6	205.0	131,000	155,900
42	80.0	204.6	122,200	145,000
44	79.4	204.2	114,300	135,400
46	78.8	203.8	107,200	126,900
48	78.2	203.4	100,900	119,300
50	77.6	203.0	95,200	112,400
55	76.2	201.7	83,000	97,900
60	74.7	200.4	73,200	86,200
65	73.2	198.9	65,100	76,700
70	71.7	197.2	58,400	68,800
75	70.2	195.4	52,600	62,100
80	68.6	193.5	47,700	56,300
85	67.1	191.4	43,300	51,400
90	65.5	189.1	39,600	47,000
95	63.9	186.7	36,200	43,100
100	62.3	184.1	33,200	39,700
105	60.6	181.3	30,500	36,600
110	59.0	178.3	28,100	33,900
115	57.3	175.1	25,900	31,400
120	55.5	171.7	23,900	29,100
125	53.8	168.1	22,100	27,000
130	52.0	164.2	20,400	25,100
135	50.1	160.1	18,800	23,300
140	48.2	155.6	17,400	21,700
145	46.2	150.9	16,100	20,200
150	44.2	145.8	14,800	18,800
155	42.1	140.4	13,700	17,500
160	39.8	134.5	12,600	16,300
165	37.5	128.1	11,600	15,100
170	35.1	121.1	10,600	14,000
175	32.4	113.4	9,700	13,000
180	29.6	104.9	8,800	12,000
185	26.5	95.3	8,000	11,100
190	23.0	84.1	7,200	10,200
195	18.9	70.6	6,500	9,400

Oper. Rad. Feet	Boom Ang. Deg.	Boom Point Elev. Feet	Boom Capacity Crawlers Retracted Pounds	Boom Capacity Crawlers Extended Pounds
210 Ft. Boom				
34	82.7	216.1	158,700 *	158,700 *
36	82.1	215.8	152,400	156,400 *
38	81.6	215.5	140,900	154,100 *
40	81.0	215.1	130,800	151,800 *
42	80.5	214.8	121,900	144,800
44	79.9	214.4	114,000	135,200
46	79.4	214.0	107,000	126,700
48	78.8	213.6	100,700	119,000
50	78.2	213.2	94,900	112,200
55	76.8	212.0	82,800	97,600
60	75.4	210.8	73,000	86,000
65	74.0	209.3	64,900	76,500
70	72.6	207.8	58,100	68,600
75	71.1	206.1	52,300	61,800
80	69.7	204.2	47,400	56,100
85	68.2	202.2	43,100	51,100
90	66.7	200.1	39,300	46,700
95	65.2	197.8	35,900	42,900
100	63.7	195.4	32,900	39,400
105	62.2	192.7	30,200	36,400
110	60.6	189.9	27,800	33,600
115	59.0	187.0	25,600	31,100
120	57.4	183.8	23,600	28,800
125	55.8	180.4	21,800	26,700
130	54.1	176.8	20,100	24,800
135	52.4	173.0	18,600	23,100
140	50.6	168.9	17,100	21,400
145	48.8	164.6	15,800	19,900
150	46.9	160.0	14,600	18,500
155	45.0	155.1	13,400	17,200
160	43.0	149.8	12,300	16,000
165	41.0	144.1	11,300	14,900
170	38.8	138.0	10,300	13,800
175	36.6	131.4	9,400	12,800
180	34.2	124.2	8,600	11,800
185	31.6	116.3	7,800	10,900
190	28.9	107.5	7,000	10,000
195	25.8	97.5	6,300	9,200
200	22.4	86.0	5,600	8,400
205	18.4	72.1	4,900	7,700

Copyright 2013–2014 National Commission for the Certification of Crane Operators. All rights reserved. LD LCM MOBILE REV 04/14

Liftcrane Boom Capacities

Meets ANSI B30.5 Requirements

Boom No. 22EL
179,100 Lb. Crane Counterweight
44,000 Lb. Carbody Counterweight
360 Degree Rating

Oper. Rad. Feet	Boom Ang. Deg.	Boom Point Elev. Feet	Boom Capacity Crawlers Retracted Pounds	Boom Capacity Crawlers Extended Pounds
220 Ft. Boom				
34	83.0	226.2	147,500 *	147,500 *
36	82.5	225.9	146,600 *	146,600 *
38	82.0	225.6	140,500	144,500 *
40	81.4	225.3	130,500	142,400 *
42	80.9	224.9	121,600	140,200 *
44	80.4	224.6	113,700	134,900
46	79.8	224.2	106,700	126,400
48	79.3	223.8	100,300	118,700
50	78.8	223.4	94,600	111,800
55	77.5	222.3	82,400	97,300
60	76.1	221.1	72,600	85,600
65	74.8	219.7	64,500	76,100
70	73.4	218.3	57,700	68,200
75	72.0	216.6	51,900	61,500
80	70.7	214.9	47,000	55,700
85	69.3	213.0	42,700	50,700
90	67.9	211.0	38,900	46,300
95	66.4	208.8	35,500	42,500
100	65.0	206.5	32,500	39,000
105	63.6	204.0	29,800	36,000
110	62.1	201.4	27,400	33,200
115	60.6	198.6	25,200	30,700
120	59.1	195.6	23,200	28,400
125	57.5	192.5	21,400	26,300
130	56.0	189.1	19,700	24,400
135	54.4	185.6	18,200	22,700
140	52.7	181.8	16,700	21,000
145	51.1	177.8	15,400	19,500
150	49.4	173.5	14,200	18,100
155	47.6	169.0	13,000	16,800
160	45.8	164.2	11,900	15,600
165	43.9	159.1	10,900	14,500
170	42.0	153.6	10,000	13,400
175	40.0	147.7	9,100	12,400
180	37.9	141.4	8,200	11,400
185	35.7	134.6	7,400	10,500
190	33.4	127.1	6,600	9,700
195	30.9	119.0	5,900	8,800
200	28.2	110.0	5,200	8,100
205	25.2	99.7	4,600	7,300
210	21.9	87.9		6,600
215	17.9	73.7		5,900

Oper. Rad. Feet	Boom Ang. Deg.	Boom Point Elev. Feet	Boom Capacity Crawlers Retracted Pounds	Boom Capacity Crawlers Extended Pounds
230 Ft. Boom				
36	82.8	236.0	133,600 *	133,600 *
38	82.3	235.7	133,300 *	133,300 *
40	81.8	235.4	130,200	132,900 *
42	81.3	235.1	121,300	131,500 *
44	80.8	234.7	113,400	129,700 *
46	80.3	234.4	106,400	126,100
48	79.8	234.0	100,000	118,500
50	79.3	233.6	94,300	111,500
55	78.0	232.6	82,100	97,000
60	76.7	231.4	72,200	85,300
65	75.4	230.1	64,100	75,800
70	74.1	228.7	57,300	67,800
75	72.8	227.2	51,500	61,100
80	71.5	225.5	46,500	55,300
85	70.2	223.7	42,200	50,300
90	68.9	221.8	38,400	45,900
95	67.5	219.7	35,100	42,000
100	66.2	217.5	32,100	38,600
105	64.8	215.2	29,400	35,500
110	63.4	212.7	27,000	32,700
115	62.0	210.1	24,800	30,200
120	60.6	207.3	22,700	28,000
125	59.1	204.3	20,900	25,900
130	57.6	201.1	19,200	24,000
135	56.1	197.8	17,700	22,200
140	54.6	194.3	16,200	20,600
145	53.1	190.6	14,900	19,100
150	51.5	186.6	13,700	17,700
155	49.9	182.4	12,500	16,300
160	48.2	178.0	11,400	15,100
165	46.5	173.3	10,400	14,000
170	44.7	168.3	9,500	12,900
175	42.9	163.0	8,600	11,900
180	41.0	157.3	7,700	10,900
185	39.1	151.3	6,900	10,000
190	37.0	144.7	6,100	9,200
195	34.9	137.7	5,400	8,400
200	32.6	130.1	4,700	7,600
205	30.2	121.7	4,100	6,900
210	27.5	112.4		6,200
215	24.6	101.9		5,500
220	21.4	89.8		4,800
225	17.5	75.2		4,200

Copyright 2013–2014 National Commission for the Certification of Crane Operators. All rights reserved. LD LCM MOBILE REV 04/14

Liftcrane Boom Capacities

Meets ANSI B30.5 Requirements

Boom No. 22EL
179,100 Lb. Crane Counterweight
44,000 Lb. Carbody Counterweight
360 Degree Rating

Oper. Rad. Feet	Boom Ang. Deg.	Boom Point Elev. Feet	Boom Capacity Crawlers Retracted Pounds	Boom Capacity Crawlers Extended Pounds
240 Ft. Boom				
38	82.6	245.8	121,300 *	121,300 *
40	82.2	245.5	121,000 *	121,000 *
42	81.7	245.2	120,700 *	120,700 *
44	81.2	244.9	113,000	120,300 *
46	80.7	244.6	106,000	120,000 *
48	80.2	244.2	99,600	118,100
50	79.7	243.8	93,900	111,200
55	78.5	242.8	81,700	96,600
60	77.3	241.7	71,800	84,900
65	76.1	240.5	63,700	75,400
70	74.8	239.1	56,900	67,400
75	73.6	237.6	51,100	60,700
80	72.3	236.1	46,100	54,900
85	71.1	234.4	41,800	49,900
90	69.8	232.5	38,000	45,500
95	68.5	230.6	34,600	41,600
100	67.2	228.5	31,600	38,200
105	65.9	226.3	28,900	35,100
110	64.6	223.9	26,500	32,300
115	63.3	221.4	24,300	29,800
120	61.9	218.7	22,300	27,500
125	60.5	215.9	20,500	25,400
130	59.2	213.0	18,800	23,500
135	57.7	209.8	17,200	21,800
140	56.3	206.5	15,800	20,100
145	54.9	203.0	14,500	18,600
150	53.4	199.3	13,200	17,200
155	51.9	195.4	12,100	15,900
160	50.3	191.3	11,000	14,700
165	48.7	187.0	10,000	13,600
170	47.1	182.4	9,000	12,500
175	45.4	177.5	8,100	11,500
180	43.7	172.3	7,300	10,500
185	41.9	166.8	6,500	9,600
190	40.1	161.0	5,700	8,800
195	38.2	154.7	5,000	8,000
200	36.2	148.0	4,300	7,200
205	34.1	140.8		6,500
210	31.9	132.9		5,800
215	29.5	124.3		5,100
220	26.9	114.7		4,500

Oper. Rad. Feet	Boom Ang. Deg.	Boom Point Elev. Feet	Boom Capacity Crawlers Retracted Pounds	Boom Capacity Crawlers Extended Pounds
250 Ft. Boom				
38	82.9	255.9	110,200 *	110,200 *
40	82.5	255.6	109,900 *	109,900 *
42	82.0	255.3	109,600 *	109,600 *
44	81.5	255.0	109,300 *	109,300 *
46	81.1	254.7	106,200	109,000 *
48	80.6	254.4	99,800	108,600 *
50	80.1	254.0	94,100	108,300 *
55	79.0	253.0	81,800	96,800
60	77.8	252.0	72,000	85,100
65	76.6	250.8	63,900	75,600
70	75.4	249.5	57,100	67,600
75	74.3	248.1	51,300	60,900
80	73.1	246.6	46,300	55,100
85	71.9	244.9	42,000	50,100
90	70.6	243.2	38,200	45,700
95	69.4	241.3	34,800	41,800
100	68.2	239.3	31,800	38,400
105	66.9	237.2	29,100	35,300
110	65.7	235.0	26,700	32,500
115	64.4	232.6	24,500	30,000
120	63.1	230.1	22,500	27,700
125	61.8	227.4	20,700	25,600
130	60.5	224.6	19,000	23,700
135	59.2	221.6	17,400	22,000
140	57.8	218.5	16,000	20,300
145	56.5	215.2	14,700	18,800
150	55.1	211.7	13,400	17,400
155	53.6	208.1	12,300	16,100
160	52.2	204.2	11,200	14,900
165	50.7	200.2	10,200	13,700
170	49.2	195.9	9,200	12,700
175	47.7	191.4	8,300	11,700
180	46.1	186.6	7,500	10,700
185	44.5	181.6	6,700	9,800
190	42.8	176.2	5,900	9,000
195	41.1	170.6	5,200	8,200
200	39.3	164.5	4,500	7,400
205	37.4	158.1		6,700
210	35.4	151.2		6,000
215	33.4	143.7		5,300
220	31.2	135.7		4,700
225	28.9	126.8		4,100

Copyright 2013–2014 National Commission for the Certification of Crane Operators. All rights reserved. LD LCM MOBILE REV 04/14

Liftcrane Boom Capacities

Meets ANSI B30.5 Requirements

Boom No. 22EL
179,100 Lb. Crane Counterweight
44,000 Lb. Carbody Counterweight
360 Degree Rating

Oper. Rad. Feet	Boom Ang. Deg.	Boom Point Elev. Feet	Boom Capacity Crawlers Retracted Pounds	Boom Capacity Crawlers Extended Pounds
260 Ft. Boom				
40	82.8	265.7	100,500 *	100,500 *
42	82.3	265.4	100,200 *	100,200 *
44	81.9	265.1	99,900 *	99,900 *
46	81.4	264.8	99,600 *	99,600 *
48	81.0	264.5	99,300 *	99,300 *
50	80.5	264.2	93,700	98,900 *
55	79.4	263.2	81,500	96,400
60	78.3	262.2	71,600	84,700
65	77.2	261.1	63,500	75,200
70	76.0	259.8	56,700	67,200
75	74.9	258.5	50,900	60,500
80	73.7	257.0	45,900	54,700
85	72.6	255.5	41,600	49,700
90	71.4	253.8	37,700	45,300
95	70.2	252.0	34,400	41,400
100	69.1	250.1	31,400	37,900
105	67.9	248.1	28,700	34,900
110	66.7	245.9	26,300	32,100
115	65.5	243.7	24,100	29,600
120	64.2	241.3	22,100	27,300
125	63.0	238.7	20,200	25,200
130	61.8	236.1	18,500	23,300
135	60.5	233.2	17,000	21,500
140	59.2	230.3	15,600	19,900
145	57.9	227.2	14,200	18,400
150	56.6	223.9	13,000	17,000
155	55.3	220.4	11,800	15,700
160	53.9	216.8	10,700	14,500
165	52.5	213.0	9,700	13,300
170	51.1	209.0	8,800	12,200
175	49.7	204.8	7,900	11,200
180	48.2	200.4	7,000	10,300
185	46.7	195.7	6,200	9,400
190	45.1	190.8	5,500	8,500
195	43.5	185.6	4,800	7,700
200	41.9	180.1	4,100	7,000
205	40.2	174.2		6,200
210	38.5	168.0		5,500
215	36.6	161.4		4,900
220	34.7	154.3		4,300

Oper. Rad. Feet	Boom Ang. Deg.	Boom Point Elev. Feet	Boom Capacity Crawlers Retracted Pounds	Boom Capacity Crawlers Extended Pounds
270 Ft. Boom				
40	83.0	275.8	91,900 *	91,900 *
42	82.6	275.5	91,600 *	91,600 *
44	82.2	275.2	91,300 *	91,300 *
46	81.7	274.9	91,000 *	91,000 *
48	81.3	274.6	90,700 *	90,700 *
50	80.9	274.3	90,400 *	90,400 *
55	79.8	273.4	81,100	89,500 *
60	78.7	272.4	71,200	84,400
65	77.6	271.3	63,100	74,800
70	76.5	270.1	56,200	66,800
75	75.5	268.8	50,400	60,100
80	74.4	267.5	45,500	54,300
85	73.2	266.0	41,100	49,200
90	72.1	264.4	37,300	44,800
95	71.0	262.6	33,900	41,000
100	69.9	260.8	30,900	37,500
105	68.7	258.9	28,200	34,400
110	67.6	256.8	25,800	31,600
115	66.4	254.7	23,600	29,100
120	65.3	252.4	21,600	26,800
125	64.1	249.9	19,700	24,700
130	62.9	247.4	18,000	22,800
135	61.7	244.7	16,500	21,000
140	60.5	241.9	15,100	19,400
145	59.2	238.9	13,700	17,900
150	58.0	235.8	12,500	16,500
155	56.7	232.6	11,300	15,200
160	55.4	229.2	10,200	14,000
165	54.1	225.6	9,200	12,800
170	52.8	221.8	8,300	11,700
175	51.5	217.8	7,400	10,700
180	50.1	213.7	6,500	9,800
185	48.7	209.3	5,700	8,900
190	47.2	204.7	5,000	8,000
195	45.8	199.9	4,300	7,200
200	44.2	194.8		6,500
205	42.7	189.5		5,700
210	41.1	183.8		5,000
215	39.4	177.8		4,400

Copyright 2013–2014 National Commission for the Certification of Crane Operators. All rights reserved. LD LCM MOBILE REV 04/14

Liftcrane Boom Capacities

Meets ANSI B30.5 Requirements

Boom No. 22EL
179,100 Lb. Crane Counterweight
44,000 Lb. Carbody Counterweight
360 Degree Rating

Oper. Rad. Feet	Boom Ang. Deg.	Boom Point Elev. Feet	Boom Capacity Crawlers Retracted Pounds	Boom Capacity Crawlers Extended Pounds
280 Ft. Boom				
42	82.9	285.6	83,000 *	83,000 *
44	82.5	285.3	82,700 *	82,700 *
46	82.0	285.1	82,500 *	82,500 *
48	81.6	284.8	82,200 *	82,200 *
50	81.2	284.4	81,900 *	81,900 *
55	80.2	283.6	80,700	81,200 *
60	79.1	282.6	70,800	80,400 *
65	78.1	281.6	62,600	74,400
70	77.0	280.4	55,800	66,400
75	76.0	279.2	50,000	59,600
80	74.9	277.8	45,000	53,800
85	73.9	276.4	40,700	48,800
90	72.8	274.9	36,900	44,400
95	71.7	273.2	33,500	40,500
100	70.6	271.5	30,500	37,100
105	69.5	269.6	27,800	34,000
110	68.4	267.6	25,300	31,200
115	67.3	265.6	23,100	28,700
120	66.2	263.4	21,100	26,400
125	65.1	261.1	19,300	24,300
130	63.9	258.6	17,600	22,400
135	62.8	256.1	16,000	20,600
140	61.6	253.4	14,600	19,000
145	60.5	250.6	13,300	17,400
150	59.3	247.6	12,000	16,000
155	58.1	244.5	10,900	14,700
160	56.8	241.3	9,800	13,500
165	55.6	237.9	8,800	12,400
170	54.4	234.3	7,800	11,300
175	53.1	230.6	6,900	10,300
180	51.8	226.7	6,100	9,300
185	50.5	222.6	5,300	8,400
190	49.1	218.3	4,500	7,600
195	47.7	213.8		6,800
200	46.3	209.0		6,000
205	44.9	204.0		5,300
210	43.4	198.8		4,600

Oper. Rad. Feet	Boom Ang. Deg.	Boom Point Elev. Feet	Boom Capacity Crawlers Retracted Pounds	Boom Capacity Crawlers Extended Pounds
290 Ft. Boom				
44	82.7	295.4	75,900 *	75,900 *
46	82.3	295.2	75,600 *	75,600 *
48	81.9	294.9	75,300 *	75,300 *
50	81.5	294.6	75,100 *	75,100 *
55	80.5	293.7	74,300 *	74,300 *
60	79.5	292.8	71,100	73,100 *
65	78.5	291.8	63,000	71,000 *
70	77.5	290.7	56,200	66,800
75	76.5	289.5	50,300	60,000
80	75.5	288.2	45,400	54,200
85	74.4	286.8	41,000	49,100
90	73.4	285.3	37,200	44,700
95	72.4	283.8	33,800	40,900
100	71.3	282.1	30,800	37,400
105	70.3	280.3	28,100	34,300
110	69.2	278.4	25,700	31,500
115	68.2	276.4	23,500	29,000
120	67.1	274.3	21,500	26,700
125	66.0	272.1	19,600	24,600
130	64.9	269.8	17,900	22,700
135	63.8	267.3	16,400	20,900
140	62.7	264.7	14,900	19,300
145	61.6	262.0	13,600	17,800
150	60.4	259.2	12,400	16,400
155	59.3	256.3	11,200	15,100
160	58.1	253.2	10,100	13,800
165	57.0	249.9	9,100	12,700
170	55.8	246.6	8,200	11,600
175	54.6	243.0	7,300	10,600
180	53.3	239.3	6,400	9,700
185	52.1	235.5	5,600	8,800
190	50.8	231.4	4,900	7,900
195	49.5	227.2	4,200	7,100
200	48.2	222.7		6,400
205	46.8	218.1		5,600
210	45.5	213.2		4,900
215	44.0	208.1		4,300

Copyright 2013–2014 National Commission for the Certification of Crane Operators. All rights reserved. LD LCM MOBILE REV 04/14

LIFTCRANE JIB CAPACITIES

MEETS ANSI B30.5 REQUIREMENTS

JIB NO. 134 WITH 12'6" STRUT ON
BOOM NO. 22EL
179,100 LB. CRANE COUNTERWEIGHT
44,000 LB. CARBODY COUNTERWEIGHT
28'2" CRAWLERS EXTENDED
360 DEGREE RATING

CHART SUPPLEMENTS BOOM CAPACITY CHART NO. 7813-A. CAPACITIES FOR VARIOUS BOOM LENGTHS, JIB LENGTHS AND JIB OPERATING RADII ARE FOR FREELY SUSPENDED LOADS AND DO NOT EXCEED 75% OF A STATIC TIPPING LOAD. CAPACITIES BASED ON STRUCTURAL COMPETENCE ARE DENOTED BY AN ASTERISK (*).

250' THRU 290' BOOM LENGTHS REQUIRE ONLY THE MIDDLE TWO SHEAVES IN LOWER BOOM POINT. ALL OTHER SHEAVES MUST BE REMOVED FROM LOWER BOOM POINT.

WEIGHT OF ALL LOAD BLOCKS, HOOKS, WEIGHT BALL, SLINGS, HOIST LINES, ETC., BENEATH BOOM AND JIB POINT SHEAVES, IS CONSIDERED PART OF JIB LOAD. BOOM AND JIB ARE NOT TO BE LOWERED BEYOND RADII WHERE COMBINED WEIGHTS ARE GREATER THAN RATED CAPACITY. WHERE NO CAPACITY IS SHOWN, OPERATION IS NOT INTENDED OR APPROVED.

MACHINE TO OPERATE IN A LEVEL POSITION ON A FIRM UNIFORMLY SUPPORTING SURFACE WITH CRAWLERS FULLY EXTENDED AND GANTRY UP. REFER TO BOOM RIGGING NO. 177156 OR NO. 177353, JIB ASSEMBLY NO. 177062, AND WIRE ROPE SPECIFICATION CHART NO. 7810-A. CRANE OPERATOR JUDGMENT MUST BE USED TO ALLOW FOR DYNAMIC LOAD EFFECTS OF SWINGING, HOISTING OR LOWERING, TRAVEL, WIND CONDITIONS, AS WELL AS ADVERSE OPERATING CONDITIONS AND PHYSICAL MACHINE DEPRECIATION. REFER TO OPERATORS MANUAL FOR OPERATING GUIDELINES.

MACHINE TO TRAVEL ON A FIRM, LEVEL AND UNIFORMLY SUPPORTING SURFACE AND BOOM WITHIN BOOM ANGLE RANGE SHOWN IN CAPACITY CHART. REFER TO MAXIMUM ALLOWABLE TRAVEL SPECIFICATION CHART NO. 7808-A.

OPERATING RADIUS IS HORIZONTAL DISTANCE FROM AXIS OF ROTATION TO CENTER OF VERTICAL HOIST LINE OR LOAD BLOCK. BOOM ANGLE IS ANGLE BETWEEN HORIZONTAL AND CENTERLINE OF BOOM BUTT AND INSERTS, AND IS AN INDICATION OF OPERATING RADIUS. IN ALL CASES, OPERATING RADIUS SHALL GOVERN CAPACITY. JIB POINT ELEVATION IS VERTICAL DISTANCE FROM GROUND LEVEL TO CENTERLINE OF JIB POINT SHAFT.

MACHINE EQUIPPED WITH 28'2" CRAWLERS, 48" TREADS, 10'3" RETRACTABLE GANTRY, 30' LIVE MAST, 20 PART BOOM HOIST REEVING, FOUR 1-3/8" BOOM PENDANTS, 179,100 LB. CRANE COUNTERWEIGHT AND 44,000 LB. CARBODY COUNTERWEIGHT.

MAXIMUM CAPACITY ON 26 mm OR 1" WIRE ROPE IS 29,500 LBS. PER LINE (20,000 LBS. WHEN AUXILIARY DRUM IS USED).

MAXIMUM BOOM AND JIB LENGTHS LIFTED UNASSISTED

OVER FRONT OF BLOCKED CRAWLERS		OVER REAR OF BLOCKED CRAWLERS		OVER SIDE OF EXTENDED CRAWLERS		OVER SIDE OF RETRACTED CRAWLERS	
BOOM LENGTH	JIB NO. 134	BOOM LENGTH	JIB NO. 134	BOOM LENGTH	JIB NO. 134	BOOM LENGTH	JIB NO. 134
(a)290'	---	(a)280'	---	(a)260'	---	230'	---
280'	---	270'	---	250'	---	220'	30'
270'	---	260'	40'	240'	---	210'	60'
260'	50'	250'	70'	230'	50'	200'	80'
250'	80'	240'	80'	220'	80'		

LOAD BLOCK, HOOK AND WEIGHT BALL ON GROUND AT START. (a) UPPER BOOM POINT CANNOT BE USED ON 290' BOOM AND CANNOT BE LIFTED OVER REAR OF BLOCKED CRAWLERS ON 280' BOOM OR SIDE OF EXTENDED CRAWLERS ON 260' BOOM.

30 FOOT JIB

BOOM LGTH. FEET	JIB OPER. RAD. FEET	5 DEGREE OFFSET			15 DEGREE OFFSET			25 DEGREE OFFSET			JIB OPER. RAD. FEET
		BOOM ANG. DEG.	JIB POINT ELEV. FEET	JIB CAPACITY POUNDS	BOOM ANG. DEG.	JIB POINT ELEV. FEET	JIB CAPACITY POUNDS	BOOM ANG. DEG.	JIB POINT ELEV. FEET	JIB CAPACITY POUNDS	
90	30	79.2	125.4	59,000*							30
	35	76.7	124.3	59,000*	79.2	123.5	59,000*				35
	40	74.2	122.9	59,000*	76.7	122.1	59,000*	79.3	120.4	48,900*	40
	45	71.7	121.2	59,000*	74.2	120.4	58,100*	76.7	118.7	46,200*	45
	50	69.2	119.3	59,000*	71.6	118.5	57,100*	74.1	116.8	43,800*	50
	55	66.6	117.2	59,000*	69.0	116.4	56,200*	71.4	114.6	41,700*	55
	60	63.9	114.7	58,100*	66.3	113.9	55,300*	68.7	112.1	39,900*	60
	65	61.2	112.0	57,100*	63.6	111.2	54,600*	65.9	109.3	38,200*	65
	70	58.4	108.9	56,100*	60.8	108.1	53,900*	63.0	106.1	36,700*	70
	75	55.5	105.5	55,300*	57.9	104.7	51,700*	60.1	102.6	35,400*	75
	80	52.5	101.7	54,600*	54.8	100.8	49,300*	57.0	98.7	34,200*	80
	85	49.4	97.5	53,900*	51.7	96.5	47,100*	53.7	94.3	33,100*	85
	90	46.1	92.8	52,100	48.4	91.8	45,200*	50.3	89.4	32,200*	90
	100	38.9	81.4	44,900	41.0	80.2	41,900*	42.7	77.5	30,600*	100
	110	30.2	66.2	39,000	32.1	64.7	39,200				110

Copyright 2013–2014 National Commission for the Certification of Crane Operators. All rights reserved. LD LCM MOBILE REV 04/14

LIFTCRANE JIB CAPACITIES

MEETS ANSI B30.5 REQUIREMENTS

JIB NO. 134 WITH 12'6" STRUT ON
BOOM NO. 22EL
179,100 LB. CRANE COUNTERWEIGHT
44,000 LB. CARBODY COUNTERWEIGHT
28'2" CRAWLERS EXTENDED
360 DEGREE RATING

30 FOOT JIB

BOOM LGTH. FEET	JIB OPER. RAD. FEET	5 DEGREE OFFSET			15 DEGREE OFFSET			25 DEGREE OFFSET			JIB OPER. RAD. FEET
		BOOM ANG. DEG.	JIB POINT ELEV. FEET	JIB CAPACITY POUNDS	BOOM ANG. DEG.	JIB POINT ELEV. FEET	JIB CAPACITY POUNDS	BOOM ANG. DEG.	JIB POINT ELEV. FEET	JIB CAPACITY POUNDS	
100	30	80.0	135.6	59,000*							30
	35	77.8	134.6	59,000*	80.1	133.8	59,000*				35
	40	75.5	133.3	59,000*	77.8	132.5	59,000*	80.1	130.8	49,900*	40
	45	73.2	131.8	59,000*	75.5	131.0	58,700*	77.8	129.2	47,300*	45
	50	70.9	130.0	59,000*	73.1	129.2	57,700*	75.4	127.5	45,000*	50
	55	68.5	128.1	59,000*	70.8	127.3	56,800*	73.0	125.5	42,900*	55
	60	66.1	125.9	59,000*	68.3	125.0	56,000*	70.5	123.2	41,100*	60
	65	63.6	123.4	58,000*	65.9	122.6	55,200*	68.0	120.7	39,400*	65
	70	61.1	120.7	57,100*	63.3	119.8	54,500*	65.4	117.9	38,000*	70
	75	58.5	117.6	56,200*	60.7	116.7	53,800*	62.8	114.8	36,600*	75
	80	55.9	114.3	55,400*	58.0	113.3	51,800*	60.1	111.3	35,400*	80
	85	53.1	110.5	54,700*	55.3	109.6	49,600*	57.2	107.5	34,300*	85
	90	50.3	106.4	51,900	52.4	105.5	47,600*	54.3	103.2	33,300*	90
	100	44.2	96.8	44,600	46.2	95.7	44,100*	47.9	93.3	31,600*	100
	110	37.2	84.7	38,800	39.2	83.5	39,100				110
	120	28.9	68.7	33,900	30.7	67.1	34,200				120
110	30	80.7	145.8	59,000*							30
	35	78.7	144.8	59,000*	80.8	144.0	59,000*				35
	40	76.5	143.6	59,000*	78.7	142.8	59,000*	80.9	141.1	50,800*	40
	45	74.4	142.2	59,000*	76.6	141.4	59,000*	78.7	139.7	48,300*	45
	50	72.3	140.6	59,000*	74.4	139.8	58,200*	76.5	138.0	46,000*	50
	55	70.1	138.8	59,000*	72.2	138.0	57,400*	74.3	136.2	44,000*	55
	60	67.9	136.8	59,000*	70.0	136.0	56,500*	72.1	134.1	42,200*	60
	65	65.7	134.6	59,000*	67.7	133.7	55,800*	69.8	131.8	40,600*	65
	70	63.4	132.1	57,900*	65.4	131.2	55,100*	67.4	129.3	39,100*	70
	75	61.0	129.3	57,000*	63.1	128.4	54,400*	65.0	126.5	37,700*	75
	80	58.6	126.3	56,200*	60.7	125.4	53,800*	62.6	123.4	36,500*	80
	85	56.2	123.0	55,500*	58.2	122.0	51,900*	60.1	120.0	35,400*	85
	90	53.6	119.3	51,400	55.6	118.4	49,900*	57.5	116.2	34,400*	90
	100	48.3	110.9	44,200	50.2	109.9	44,700	51.9	107.5	32,600*	100
	110	42.4	100.7	38,300	44.3	99.5	38,700	45.9	96.9	31,100*	110
	120	35.8	87.9	33,500	37.6	86.6	33,800				120
	130	27.8	71.1	29,500							130
120	35	79.4	155.0	59,000*							35
	40	77.5	153.9	59,000*	79.5	153.1	59,000*				40
	45	75.5	152.6	59,000*	77.5	151.8	59,000*	79.5	150.0	49,100*	45
	50	73.5	151.2	59,000*	75.5	150.4	58,700*	77.5	148.5	47,000*	50
	55	71.5	149.5	59,000*	73.5	148.7	57,800*	75.4	146.8	45,000*	55
	60	69.4	147.6	59,000*	71.4	146.8	57,100*	73.4	144.9	43,200*	60
	65	67.4	145.5	59,000*	69.3	144.7	56,300*	71.2	142.8	41,600*	65
	70	65.3	143.3	58,700*	67.2	142.4	55,600*	69.1	140.5	40,100*	70
	75	63.1	140.7	57,800*	65.1	139.9	54,900*	66.9	137.9	38,800*	75
	80	61.0	138.0	57,000*	62.9	137.1	54,400*	64.7	135.1	37,500*	80
	85	58.7	135.0	55,500	60.6	134.0	53,800*	62.4	132.0	36,400*	85
	90	56.4	131.7	51,100	58.3	130.7	51,800	60.1	128.6	35,400*	90
	100	51.7	124.1	43,800	53.5	123.2	44,400	55.1	120.9	33,600*	100
	110	46.5	115.2	38,000	48.3	114.1	38,500	49.9	111.7	32,000*	110
	120	40.9	104.4	33,200	42.6	103.2	33,600	44.0	100.4	30,800*	120
	130	34.5	91.0	29,200	36.1	89.6	29,500				130
	140	26.8	73.5	25,800							140
130	35	80.1	165.2	59,000*							35
	40	78.3	164.2	59,000*	80.2	163.4	59,000*				40
	45	76.4	163.0	59,000*	78.3	162.2	59,000*	80.2	160.4	49,900*	45
	50	74.6	161.6	59,000*	76.4	160.8	59,000*	78.3	159.0	47,800*	50
	55	72.7	160.1	59,000*	74.5	159.2	58,300*	76.4	157.4	45,900*	55
	60	70.8	158.3	59,000*	72.6	157.5	57,500*	74.5	155.6	44,100*	60
	65	68.9	156.4	59,000*	70.7	155.5	56,800*	72.5	153.7	42,600*	65
	70	66.9	154.3	59,000*	68.8	153.4	56,100*	70.5	151.5	41,100*	70
	75	65.0	151.9	58,600*	66.8	151.1	55,500*	68.5	149.1	39,800*	75
	80	62.9	149.4	57,700*	64.7	148.5	54,900*	66.5	146.5	38,500*	80
	85	60.9	146.6	55,200	62.7	145.7	54,300*	64.4	143.7	37,400*	85
	90	58.8	143.6	50,900	60.6	142.7	51,600	62.2	140.6	36,300*	90
	100	54.5	136.8	43,600	56.2	135.8	44,200	57.8	133.6	34,500*	100
	110	49.9	128.8	37,800	51.6	127.8	38,300	53.1	125.4	32,900*	110
	120	44.9	119.3	33,000	46.6	118.2	33,400	48.0	115.6	31,600*	120
	130	39.5	107.9	29,000	41.1	106.7	29,300	42.4	103.8	29,600	130
	140	33.4	93.9	25,600	34.9	92.5	25,800				140
	150	25.9	75.7	22,600							150

Copyright 2013–2014 National Commission for the Certification of Crane Operators. All rights reserved. LD LCM MOBILE REV 04/14

LIFTCRANE JIB CAPACITIES

MEETS ANSI B30.5 REQUIREMENTS

JIB NO. 134 WITH 12'6" STRUT ON
BOOM NO. 22EL
179,100 LB. CRANE COUNTERWEIGHT
44,000 LB. CARBODY COUNTERWEIGHT
28'2" CRAWLERS EXTENDED
360 DEGREE RATING

30 FOOT JIB

BOOM LGTH. FEET	JIB OPER. RAD. FEET	5 DEGREE OFFSET			15 DEGREE OFFSET			25 DEGREE OFFSET			JIB OPER. RAD. FEET
		BOOM ANG. DEG.	JIB POINT ELEV. FEET	JIB CAPACITY POUNDS	BOOM ANG. DEG.	JIB POINT ELEV. FEET	JIB CAPACITY POUNDS	BOOM ANG. DEG.	JIB POINT ELEV. FEET	JIB CAPACITY POUNDS	
140	35	80.7	175.4	59,000*							35
	40	79.0	174.4	59,000*	80.7	173.6	59,000*				40
	45	77.2	173.3	59,000*	79.0	172.5	59,000*	80.8	170.6	50,600*	45
	50	75.5	172.0	59,000*	77.3	171.2	59,000*	79.0	169.3	48,600*	50
	55	73.7	170.5	59,000*	75.5	169.7	58,700*	77.2	167.9	46,700*	55
	60	72.0	168.9	59,000*	73.7	168.1	57,900*	75.4	166.2	45,000*	60
	65	70.2	167.1	59,000*	71.9	166.3	57,200*	73.6	164.4	43,400*	65
	70	68.4	165.1	59,000*	70.1	164.3	56,600*	71.8	162.4	42,000*	70
	75	66.5	163.0	59,000*	68.2	162.1	55,900*	69.9	160.2	40,700*	75
	80	64.7	160.6	58,500*	66.4	159.7	55,300*	68.0	157.8	39,400*	80
	85	62.8	158.1	54,900	64.5	157.2	54,800*	66.1	155.1	38,300*	85
	90	60.8	155.3	50,500	62.5	154.4	51,200	64.1	152.3	37,300*	90
	100	56.9	149.0	43,200	58.5	148.1	43,900	60.0	145.9	35,400*	100
	110	52.7	141.8	37,400	54.3	140.8	37,900	55.8	138.5	33,800*	110
	120	48.3	133.3	32,600	49.9	132.2	33,100	51.2	129.8	32,400*	120
	130	43.5	123.3	28,600	45.1	122.1	29,000	46.3	119.5	29,300	130
	140	38.3	111.4	25,200	39.8	110.1	25,500				140
	150	32.3	96.8	22,300	33.7	95.3	22,500				150
	160	25.1	77.9	19,700							160
150	40	79.6	184.6	59,000*							40
	45	78.0	183.6	59,000*	79.6	182.7	59,000*				45
	50	76.3	182.3	59,000*	78.0	181.5	59,000*	79.7	179.7	49,300*	50
	55	74.7	181.0	59,000*	76.3	180.1	59,000*	78.0	178.3	47,500*	55
	60	73.0	179.5	59,000*	74.7	178.6	58,300*	76.3	176.7	45,800*	60
	65	71.3	177.8	59,000*	73.0	176.9	57,600*	74.6	175.0	44,300*	65
	70	69.6	175.9	59,000*	71.3	175.1	57,000*	72.9	173.1	42,800*	70
	75	67.9	173.9	59,000*	69.5	173.0	56,400*	71.1	171.1	41,500*	75
	80	66.2	171.7	59,000*	67.8	170.8	55,800*	69.3	168.8	40,300*	80
	85	64.4	169.3	54,400	66.0	168.4	55,200*	67.6	166.4	39,200*	85
	90	62.6	166.7	50,000	64.2	165.8	50,800	65.7	163.8	38,100*	90
	100	58.9	161.0	42,800	60.5	160.0	43,400	62.0	157.9	36,200*	100
	110	55.1	154.3	36,900	56.7	153.3	37,500	58.1	151.1	34,600*	110
	120	51.1	146.5	32,100	52.6	145.5	32,600	53.9	143.1	33,100	120
	130	46.8	137.6	28,100	48.3	136.5	28,600	49.6	133.9	28,900	130
	140	42.2	127.1	24,700	43.6	125.9	25,100	44.8	123.2	25,400	140
	150	37.1	114.7	21,800	38.5	113.4	22,100				150
	160	31.4	99.6	19,300	32.7	98.0	19,500				160
	170	24.4	80.0	17,000							170
160	40	80.1	194.8	59,000*							40
	45	78.6	193.8	59,000*	80.2	193.0	59,000*				45
	50	77.1	192.7	59,000*	78.6	191.8	59,000*	80.2	190.0	50,000*	50
	55	75.5	191.4	59,000*	77.1	190.5	59,000*	78.6	188.6	48,200*	55
	60	73.9	189.9	59,000*	75.5	189.1	58,700*	77.1	187.2	46,500*	60
	65	72.3	188.3	59,000*	73.9	187.5	58,000*	75.4	185.6	45,000*	65
	70	70.8	186.6	59,000*	72.3	185.7	57,400*	73.8	183.8	43,600*	70
	75	69.1	184.7	59,000*	70.7	183.8	56,800*	72.2	181.9	42,300*	75
	80	67.5	182.6	59,000*	69.0	181.8	56,200*	70.5	179.8	41,100*	80
	85	65.9	180.4	54,000	67.4	179.5	54,900	68.9	177.5	40,000*	85
	90	64.2	178.0	49,600	65.7	177.1	50,500	67.1	175.0	38,900*	90
	100	60.8	172.6	42,300	62.3	171.7	43,100	63.7	169.6	37,000*	100
	110	57.2	166.4	36,500	58.7	165.4	37,100	60.0	163.3	35,400*	110
	120	53.5	159.3	31,700	55.0	158.3	32,300	56.3	156.0	32,700	120
	130	49.6	151.2	27,700	51.0	150.1	28,200	52.3	147.6	28,600	130
	140	45.5	141.8	24,300	46.9	140.6	24,700	48.0	138.0	25,000	140
	150	41.0	130.8	21,400	42.4	129.6	21,700	43.4	126.7	22,000	150
	160	36.1	117.9	18,900	37.4	116.5	19,100				160
	170	30.5	102.3	16,600	31.7	100.6	16,800				170
	180	23.7	82.0	14,600							180

Copyright 2013–2014 National Commission for the Certification of Crane Operators. All rights reserved. LD LCM MOBILE REV 04/14

LIFTCRANE JIB CAPACITIES

MEETS ANSI B30.5 REQUIREMENTS

JIB NO. 134 WITH 12'6" STRUT ON
BOOM NO. 22EL
179,100 LB. CRANE COUNTERWEIGHT
44,000 LB. CARBODY COUNTERWEIGHT
28'2" CRAWLERS EXTENDED
360 DEGREE RATING

30 FOOT JIB

BOOM LGTH. FEET	JIB OPER. RAD. FEET	5 DEGREE OFFSET			15 DEGREE OFFSET			25 DEGREE OFFSET			JIB OPER. RAD. FEET
		BOOM ANG. DEG.	JIB POINT ELEV. FEET	JIB CAPACITY POUNDS	BOOM ANG. DEG.	JIB POINT ELEV. FEET	JIB CAPACITY POUNDS	BOOM ANG. DEG.	JIB POINT ELEV. FEET	JIB CAPACITY POUNDS	
170	40	80.6	205.0	59,000*							40
	45	79.2	204.0	59,000*	80.7	203.2	59,000*				45
	50	77.7	202.9	59,000*	79.2	202.1	59,000*	80.7	200.2	50,600*	50
	55	76.2	201.7	59,000*	77.7	200.9	59,000*	79.2	199.0	48,800*	55
	60	74.8	200.4	59,000*	76.2	199.5	59,000*	77.7	197.6	47,200*	60
	65	73.3	198.9	59,000*	74.7	198.0	58,300*	76.2	196.1	45,700*	65
	70	71.8	197.2	59,000*	73.2	196.3	57,700*	74.7	194.4	44,300*	70
	75	70.2	195.4	59,000*	71.7	194.5	57,200*	73.1	192.6	43,000*	75
	80	68.7	193.5	58,700	70.2	192.6	56,600*	71.6	190.6	41,800*	80
	85	67.1	191.4	53,700	68.6	190.5	54,600	70.0	188.5	40,700*	85
	90	65.6	189.1	49,300	67.0	188.2	50,200	68.4	186.2	39,700*	90
	100	62.4	184.1	42,000	63.8	183.1	42,800	65.1	181.0	37,800*	100
	110	59.0	178.3	36,200	60.5	177.3	36,900	61.8	175.2	36,100*	110
	120	55.6	171.7	31,400	57.0	170.7	32,000	58.3	168.4	32,500	120
	130	52.0	164.2	27,400	53.4	163.1	27,900	54.6	160.8	28,300	130
	140	48.3	155.6	24,000	49.6	154.5	24,500	50.8	152.0	24,800	140
	150	44.2	145.8	21,100	45.6	144.6	21,500	46.6	141.9	21,800	150
	160	39.9	134.5	18,600	41.2	133.2	18,900	42.2	130.2	19,100	160
	170	35.1	121.1	16,400	36.3	119.6	16,600				170
	180	29.7	104.9	14,400	30.8	103.2	14,600				180
	190	23.0	84.0	12,600							190
180	45	79.7	214.2	59,000*							45
	50	78.3	213.2	59,000*	79.7	212.3	59,000*				50
	55	76.9	212.0	59,000*	78.3	211.2	59,000*	79.8	209.3	49,400*	55
	60	75.5	210.7	59,000*	76.9	209.9	59,000*	78.3	208.0	47,900*	60
	65	74.1	209.3	59,000*	75.5	208.4	58,700*	76.9	206.5	46,400*	65
	70	72.7	207.7	59,000*	74.1	206.9	58,100*	75.5	204.9	45,000*	70
	75	71.2	206.1	59,000*	72.6	205.2	57,500*	74.0	203.2	43,700*	75
	80	69.8	204.2	58,300	71.2	203.3	57,000*	72.5	201.4	42,600*	80
	85	68.3	202.2	53,300	69.7	201.3	54,300	71.0	199.3	41,400*	85
	90	66.8	200.1	48,900	68.2	199.2	49,800	69.5	197.2	40,400*	90
	100	63.8	195.3	41,600	65.2	194.4	42,400	66.5	192.3	38,500*	100
	110	60.7	189.9	35,800	62.0	189.0	36,500	63.3	186.8	36,800*	110
	120	57.5	183.8	31,000	58.8	182.8	31,600	60.0	180.6	32,100	120
	130	54.2	176.8	27,000	55.5	175.8	27,500	56.6	173.5	28,000	130
	140	50.7	168.9	23,600	52.0	167.8	24,100	53.1	165.4	24,500	140
	150	47.0	160.0	20,700	48.3	158.8	21,100	49.3	156.3	21,400	150
	160	43.1	149.7	18,200	44.4	148.5	18,500	45.3	145.8	18,800	160
	170	38.9	138.0	16,000	40.1	136.6	16,200				170
	180	34.2	124.1	14,000	35.4	122.6	14,200				180
	190	28.9	107.4	12,200							190
	200	22.5	86.0	10,600							200
190	45	80.2	224.4	59,000*							45
	50	78.9	223.4	59,000*	80.2	222.6	59,000*				50
	55	77.5	222.3	59,000*	78.9	221.5	59,000*	80.3	219.5	50,000*	55
	60	76.2	221.1	59,000*	77.5	220.2	59,000*	78.9	218.3	48,400*	60
	65	74.8	219.7	59,000*	76.2	218.9	59,000*	77.5	216.9	47,000*	65
	70	73.5	218.2	59,000*	74.8	217.4	58,400*	76.2	215.4	45,700*	70
	75	72.1	216.6	59,000*	73.4	215.8	57,800*	74.8	213.8	44,400*	75
	80	70.7	214.9	57,800	72.1	214.0	57,300*	73.4	212.0	43,200*	80
	85	69.3	213.0	52,800	70.7	212.1	53,900	72.0	210.1	42,100*	85
	90	67.9	211.0	48,500	69.2	210.1	49,400	70.5	208.1	41,100*	90
	100	65.1	206.5	41,100	66.4	205.6	42,000	67.6	203.5	39,200*	100
	110	62.1	201.4	35,300	63.4	200.4	36,000	64.7	198.3	36,700	110
	120	59.1	195.6	30,500	60.4	194.6	31,100	61.6	192.4	31,700	120
	130	56.0	189.1	26,500	57.3	188.1	27,100	58.4	185.8	27,600	130
	140	52.8	181.8	23,100	54.0	180.7	23,600	55.1	178.4	24,000	140
	150	49.4	173.5	20,200	50.6	172.4	20,600	51.7	169.9	21,000	150
	160	45.9	164.2	17,700	47.1	163.0	18,000	48.1	160.4	18,300	160
	170	42.1	153.6	15,400	43.2	152.3	15,800	44.2	149.5	16,000	170
	180	38.0	141.4	13,500	39.1	140.0	13,700				180
	190	33.4	127.1	11,700	34.5	125.6	11,900				190
	200	28.2	109.9	10,100							200
	210	21.9	87.9	8,700							210

Copyright 2013–2014 National Commission for the Certification of Crane Operators. All rights reserved. LD LCM MOBILE REV 04/14

LIFTCRANE JIB CAPACITIES

MEETS ANSI B30.5 REQUIREMENTS

JIB NO. 134 WITH 12'6" STRUT ON BOOM NO. 22EL
179,100 LB. CRANE COUNTERWEIGHT
44,000 LB. CARBODY COUNTERWEIGHT
28'2" CRAWLERS EXTENDED
360 DEGREE RATING

30 FOOT JIB

BOOM LGTH. FEET	JIB OPER. RAD. FEET	5 DEGREE OFFSET			15 DEGREE OFFSET			25 DEGREE OFFSET			JIB OPER. RAD. FEET
		BOOM ANG. DEG.	JIB POINT ELEV. FEET	JIB CAPACITY POUNDS	BOOM ANG. DEG.	JIB POINT ELEV. FEET	JIB CAPACITY POUNDS	BOOM ANG. DEG.	JIB POINT ELEV. FEET	JIB CAPACITY POUNDS	
200	45	80.6	234.6	59,000*							45
	50	79.3	233.6	59,000*	80.7	232.8	59,000*				50
	55	78.1	232.6	59,000*	79.4	231.7	59,000*	80.7	229.8	50,500*	55
	60	76.8	231.4	59,000*	78.1	230.5	59,000*	79.4	228.6	49,000*	60
	65	75.5	230.1	59,000*	76.8	229.2	59,000*	78.1	227.3	47,600*	65
	70	74.2	228.7	59,000*	75.5	227.8	58,700*	76.8	225.9	46,300*	70
	75	72.9	227.1	59,000*	74.2	226.3	58,100*	75.5	224.3	45,000*	75
	80	71.6	225.5	57,400	72.9	224.6	57,600*	74.1	222.6	43,900*	80
	85	70.3	223.7	52,400	71.5	222.8	53,500	72.8	220.8	42,800*	85
	90	68.9	221.8	48,000	70.2	220.9	49,000	71.4	218.9	41,700*	90
	100	66.2	217.5	40,700	67.5	216.6	41,600	68.7	214.5	39,900*	100
	110	63.5	212.7	34,900	64.7	211.8	35,600	65.9	209.6	36,300	110
	120	60.6	207.2	30,100	61.9	206.3	30,700	63.0	204.1	31,300	120
	130	57.7	201.1	26,100	58.9	200.1	26,600	60.0	197.9	27,200	130
	140	54.7	194.3	22,700	55.9	193.2	23,200	57.0	190.9	23,600	140
	150	51.5	186.6	19,800	52.7	185.5	20,200	53.8	183.1	20,600	150
	160	48.3	178.0	17,200	49.4	176.9	17,600	50.4	174.3	18,000	160
	170	44.8	168.3	15,000	45.9	167.1	15,300	46.9	164.4	15,600	170
	180	41.1	157.3	13,000	42.2	156.0	13,300	43.0	153.1	13,600	180
	190	37.1	144.7	11,300	38.1	143.3	11,500				190
	200	32.6	130.0	9,700	33.7	128.4	9,900				200
	210	27.6	112.3	8,300							210
	220	21.4	89.7	6,900							220
210	45	81.0	244.7	59,000*							45
	50	79.8	243.8	59,000*							50
	55	78.6	242.8	59,000*	79.8	241.9	59,000*				55
	60	77.4	241.7	59,000*	78.6	240.8	59,000*	79.9	238.9	49,500*	60
	65	76.1	240.4	59,000*	77.4	239.6	59,000*	78.6	237.6	48,100*	65
	70	74.9	239.1	59,000*	76.1	238.2	59,000*	77.4	236.3	46,800*	70
	75	73.6	237.6	59,000*	74.9	236.7	58,400*	76.1	234.8	45,600*	75
	80	72.4	236.0	57,100	73.6	235.2	57,900*	74.8	233.2	44,500*	80
	85	71.1	234.3	52,100	72.4	233.4	53,200	73.6	231.4	43,400*	85
	90	69.9	232.5	47,700	71.1	231.6	48,700	72.3	229.6	42,400*	90
	100	67.3	228.5	40,400	68.5	227.5	41,200	69.7	225.5	40,500*	100
	110	64.7	223.9	34,500	65.9	222.9	35,300	67.0	220.8	36,000	110
	120	62.0	218.7	29,700	63.2	217.8	30,400	64.3	215.6	31,000	120
	130	59.2	212.9	25,700	60.4	212.0	26,300	61.5	209.7	26,900	130
	140	56.4	206.5	22,300	57.5	205.5	22,900	58.6	203.2	23,300	140
	150	53.4	199.3	19,400	54.6	198.2	19,900	55.6	195.9	20,300	150
	160	50.4	191.3	16,900	51.5	190.2	17,300	52.5	187.7	17,700	160
	170	47.2	182.3	14,700	48.3	181.2	15,000	49.2	178.6	15,300	170
	180	43.8	172.3	12,700	44.9	171.1	13,000	45.7	168.3	13,300	180
	190	40.2	160.9	10,900	41.2	159.6	11,200	42.0	156.6	11,400	190
	200	36.3	148.0	9,400	37.3	146.5	9,600				200
	210	31.9	132.9	7,900	32.9	131.2	8,100				210
	220	27.0	114.7	6,600							220
	230	21.0	91.6	5,400							230

Copyright 2013–2014 National Commission for the Certification of Crane Operators. All rights reserved. LD LCM MOBILE REV 04/14

LIFTCRANE JIB CAPACITIES

MEETS ANSI B30.5 REQUIREMENTS

JIB NO. 134 WITH 12'6" STRUT ON
BOOM NO. 22EL
179,100 LB. CRANE COUNTERWEIGHT
44,000 LB. CARBODY COUNTERWEIGHT
28'2" CRAWLERS EXTENDED
360 DEGREE RATING

30 FOOT JIB

BOOM LGTH. FEET	JIB OPER. RAD. FEET	5 DEGREE OFFSET			15 DEGREE OFFSET			25 DEGREE OFFSET			JIB OPER. RAD. FEET
		BOOM ANG. DEG.	JIB POINT ELEV. FEET	JIB CAPACITY POUNDS	BOOM ANG. DEG.	JIB POINT ELEV. FEET	JIB CAPACITY POUNDS	BOOM ANG. DEG.	JIB POINT ELEV. FEET	JIB CAPACITY POUNDS	
220	50	80.2	254.0	59,000*							50
	55	79.0	253.0	59,000*	80.2	252.1	59,000*				55
	60	77.9	251.9	59,000*	79.1	251.1	59,000*	80.3	249.1	50,000*	60
	65	76.7	250.8	59,000*	77.9	249.9	59,000*	79.1	247.9	48,600*	65
	70	75.5	249.5	59,000*	76.7	248.6	59,000*	77.9	246.6	47,400*	70
	75	74.3	248.1	59,000*	75.5	247.2	58,700*	76.7	245.2	46,200*	75
	80	73.1	246.5	56,600	74.3	245.7	57,900	75.5	243.7	45,000*	80
	85	71.9	244.9	51,600	73.1	244.0	52,800	74.2	242.0	44,000*	85
	90	70.7	243.2	47,200	71.9	242.3	48,300	73.0	240.3	43,000*	90
	100	68.2	239.3	39,900	69.4	238.4	40,800	70.5	236.3	41,100*	100
	110	65.7	234.9	34,100	66.9	234.0	34,900	68.0	231.9	35,600	110
	120	63.2	230.0	29,300	64.3	229.1	30,000	65.4	226.9	30,600	120
	130	60.6	224.6	25,300	61.7	223.6	25,900	62.8	221.4	26,500	130
	140	57.9	218.5	21,900	59.0	217.5	22,400	60.0	215.2	22,900	140
	150	55.1	211.7	19,000	56.2	210.7	19,500	57.2	208.3	19,900	150
	160	52.3	204.2	16,400	53.3	203.1	16,900	54.3	200.7	17,300	160
	170	49.3	195.9	14,200	50.3	194.7	14,600	51.3	192.2	14,900	170
	180	46.1	186.6	12,200	47.2	185.4	12,600	48.1	182.7	12,900	180
	190	42.8	176.2	10,500	43.9	174.9	10,800	44.7	172.1	11,000	190
	200	39.3	164.5	8,900	40.3	163.1	9,200				200
	210	35.5	151.1	7,500	36.5	149.7	7,700				210
	220	31.3	135.6	6,200	32.2	134.0	6,400				220
	230	26.4	117.0	5,000							230
230	50	80.6	264.1	59,000*							50
	55	79.5	263.2	59,000*	80.6	262.3	59,000*				55
	60	78.3	262.2	59,000*	79.5	261.3	59,000*	80.7	259.4	50,500*	60
	65	77.2	261.0	59,000*	78.4	260.2	59,000*	79.5	258.2	49,100*	65
	70	76.1	259.8	59,000*	77.2	258.9	59,000*	78.4	257.0	47,900*	70
	75	74.9	258.5	59,000*	76.1	257.6	59,000*	77.2	255.6	46,700*	75
	80	73.8	257.0	56,200	74.9	256.1	57,500	76.1	254.1	45,600*	80
	85	72.6	255.4	51,200	73.8	254.6	52,400	74.9	252.6	44,500*	85
	90	71.5	253.8	46,800	72.6	252.9	47,900	73.7	250.9	43,500*	90
	100	69.1	250.1	39,400	70.2	249.2	40,400	71.3	247.1	41,300	100
	110	66.7	245.9	33,600	67.8	245.0	34,400	68.9	242.9	35,200	110
	120	64.3	241.2	28,800	65.4	240.3	29,500	66.4	238.2	30,200	120
	130	61.8	236.0	24,800	62.9	235.1	25,400	63.9	232.9	26,000	130
	140	59.3	230.3	21,400	60.4	229.3	21,900	61.3	227.0	22,500	140
	150	56.7	223.9	18,400	57.7	222.8	19,000	58.7	220.5	19,400	150
	160	54.0	216.8	15,900	55.0	215.7	16,400	56.0	213.4	16,800	160
	170	51.2	209.0	13,700	52.2	207.9	14,100	53.1	205.4	14,500	170
	180	48.2	200.3	11,700	49.3	199.2	12,100	50.1	196.6	12,400	180
	190	45.2	190.7	10,000	46.2	189.5	10,300	47.0	186.8	10,600	190
	200	42.0	180.0	8,400	42.9	178.7	8,700	43.7	175.8	8,900	200
	210	38.5	168.0	7,000	39.5	166.6	7,200				210
	220	34.8	154.3	5,700	35.7	152.7	5,900				220
	230	30.6	138.3	4,500	31.5	136.6	4,700				230
240	50	80.9	274.3	59,000*							50
	55	79.9	273.4	59,000*	81.0	272.5	59,000*				55
	60	78.8	272.4	59,000*	79.9	271.5	59,000*	81.0	269.6	50,900*	60
	65	77.7	271.3	59,000*	78.8	270.4	59,000*	79.9	268.5	49,600*	65
	70	76.6	270.1	59,000*	77.7	269.2	59,000*	78.8	267.3	48,400*	70
	75	75.5	268.8	59,000*	76.6	267.9	59,000*	77.7	266.0	47,200*	75
	80	74.4	267.4	55,800	75.5	266.5	57,100	76.6	264.6	46,100*	80
	85	73.3	265.9	50,700	74.4	265.0	52,000	75.5	263.0	45,000*	85
	90	72.2	264.3	46,300	73.3	263.4	47,500	74.3	261.4	44,000*	90
	100	69.9	260.8	39,000	71.0	259.9	40,000	72.1	257.8	41,000	100
	110	67.6	256.8	33,100	68.7	255.9	34,000	69.8	253.8	34,800	110
	120	65.3	252.3	28,300	66.4	251.4	29,100	67.4	249.3	29,800	120
	130	63.0	247.4	24,300	64.0	246.4	25,000	65.0	244.3	25,600	130
	140	60.5	241.9	20,900	61.6	240.9	21,500	62.5	238.7	22,100	140
	150	58.0	235.8	18,000	59.1	234.8	18,500	60.0	232.5	19,000	150
	160	55.5	229.1	15,400	56.5	228.1	15,900	57.4	225.7	16,400	160
	170	52.9	221.8	13,200	53.9	220.7	13,700	54.8	218.3	14,100	170
	180	50.1	213.7	11,200	51.1	212.5	11,700	52.0	210.0	12,000	180
	190	47.3	204.7	9,500	48.3	203.5	9,900	49.1	200.9	10,200	190
	200	44.3	194.8	7,900	45.3	193.6	8,200	46.0	190.8	8,500	200
	210	41.1	183.8	6,500	42.1	182.5	6,800	42.8	179.5	7,000	210
	220	37.8	171.4	5,200	38.7	170.0	5,500				220
	230	34.1	157.3	4,000	35.0	155.7	4,300				230

Copyright 2013–2014 National Commission for the Certification of Crane Operators. All rights reserved. LD LCM MOBILE REV 04/14

LIFTCRANE JIB CAPACITIES

MEETS ANSI B30.5 REQUIREMENTS

JIB NO. 134 WITH 12'6" STRUT ON
BOOM NO. 22EL
179,100 LB. CRANE COUNTERWEIGHT
44,000 LB. CARBODY COUNTERWEIGHT
28'2" CRAWLERS EXTENDED
360 DEGREE RATING

30 FOOT JIB

BOOM LGTH. FEET	JIB OPER. RAD. FEET	5 DEGREE OFFSET			15 DEGREE OFFSET			25 DEGREE OFFSET			JIB OPER. RAD. FEET
		BOOM ANG. DEG.	JIB POINT ELEV. FEET	JIB CAPACITY POUNDS	BOOM ANG. DEG.	JIB POINT ELEV. FEET	JIB CAPACITY POUNDS	BOOM ANG. DEG.	JIB POINT ELEV. FEET	JIB CAPACITY POUNDS	
250	55	80.2	283.6	59,000*							55
	60	79.2	282.6	59,000*	80.3	281.7	59,000*				60
	65	78.1	281.6	59,000*	79.2	280.7	59,000*	80.3	278.7	50,000*	65
	70	77.1	280.4	59,000*	78.2	279.5	59,000*	79.2	277.6	48,800*	70
	75	76.0	279.2	59,000*	77.1	278.3	59,000*	78.2	276.3	47,700*	75
	80	75.0	277.8	55,800	76.0	276.9	57,200	77.1	274.9	46,600*	80
	85	73.9	276.4	50,800	75.0	275.5	52,000	76.0	273.5	45,500*	85
	90	72.8	274.8	46,400	73.9	273.9	47,600	74.9	271.9	44,600*	90
	100	70.7	271.4	39,100	71.7	270.5	40,100	72.7	268.5	41,000	100
	110	68.5	267.6	33,200	69.5	266.7	34,100	70.5	264.6	34,900	110
	120	66.3	263.4	28,400	67.3	262.4	29,200	68.3	260.3	29,900	120
	130	64.0	258.6	24,400	65.0	257.6	25,100	66.0	255.5	25,700	130
	140	61.7	253.4	21,000	62.7	252.4	21,600	63.6	250.2	22,200	140
	150	59.3	247.6	18,000	60.3	246.6	18,600	61.2	244.3	19,100	150
	160	56.9	241.2	15,500	57.9	240.2	16,000	58.8	237.9	16,500	160
	170	54.4	234.3	13,300	55.4	233.2	13,700	56.3	230.8	14,200	170
	180	51.8	226.6	11,300	52.8	225.5	11,700	53.6	223.1	12,100	180
	190	49.2	218.2	9,600	50.1	217.1	10,000	50.9	214.5	10,300	190
	200	46.4	209.0	8,000	47.3	207.8	8,300	48.1	205.1	8,600	200
	210	43.4	198.8	6,600	44.4	197.5	6,900	45.1	194.7	7,100	210
	220	40.3	187.4	5,300	41.2	186.1	5,600	41.9	183.1	5,800	220
	230	37.0	174.7	4,100	37.9	173.3	4,400				230
260	55	80.6	293.7	59,000*							55
	60	79.6	292.8	59,000*	80.6	291.9	59,000*				60
	65	78.6	291.8	59,000*	79.6	290.9	59,000*	80.6	288.9	50,400*	65
	70	77.5	290.7	59,000*	78.6	289.8	59,000*	79.6	287.8	49,200*	70
	75	76.5	289.5	59,000*	77.6	288.6	59,000*	78.6	286.6	48,100*	75
	80	75.5	288.2	55,400	76.5	287.3	56,800	77.6	285.3	47,000*	80
	85	74.5	286.8	50,400	75.5	285.9	51,600	76.5	283.9	46,000*	85
	90	73.5	285.3	46,000	74.5	284.4	47,100	75.5	282.4	45,000*	90
	100	71.4	282.1	38,600	72.4	281.1	39,600	73.4	279.1	40,700	100
	110	69.3	278.4	32,700	70.3	277.5	33,600	71.2	275.4	34,500	110
	120	67.1	274.3	27,900	68.1	273.3	28,700	69.1	271.2	29,500	120
	130	65.0	269.7	23,900	66.0	268.8	24,600	66.9	266.6	25,300	130
	140	62.8	264.7	20,500	63.7	263.7	21,100	64.7	261.6	21,800	140
	150	60.5	259.2	17,600	61.5	258.2	18,200	62.4	256.0	18,700	150
	160	58.2	253.2	15,000	59.2	252.1	15,600	60.0	249.9	16,100	160
	170	55.8	246.5	12,800	56.8	245.5	13,300	57.6	243.1	13,700	170
	180	53.4	239.3	10,900	54.3	238.2	11,300	55.1	235.8	11,700	180
	190	50.9	231.4	9,100	51.8	230.3	9,500	52.6	227.7	9,800	190
	200	48.2	222.7	7,600	49.2	221.5	7,900	49.9	218.9	8,200	200
	210	45.5	213.2	6,100	46.4	212.0	6,500	47.1	209.2	6,700	210
	220	42.6	202.7	4,900	43.5	201.4	5,100	44.2	198.5	5,400	220

Copyright 2013–2014 National Commission for the Certification of Crane Operators. All rights reserved. LD LCM MOBILE REV 04/14

LIFTCRANE JIB CAPACITIES

MEETS ANSI B30.5 REQUIREMENTS

JIB NO. 134 WITH 12'6" STRUT ON
BOOM NO. 22EL
179,100 LB. CRANE COUNTERWEIGHT
44,000 LB. CARBODY COUNTERWEIGHT
28'2" CRAWLERS EXTENDED
360 DEGREE RATING

40 FOOT JIB

BOOM LGTH. FEET	JIB OPER. RAD. FEET	5 DEGREE OFFSET			15 DEGREE OFFSET			25 DEGREE OFFSET			JIB OPER. RAD. FEET
		BOOM ANG. DEG.	JIB POINT ELEV. FEET	JIB CAPACITY POUNDS	BOOM ANG. DEG.	JIB POINT ELEV. FEET	JIB CAPACITY POUNDS	BOOM ANG. DEG.	JIB POINT ELEV. FEET	JIB CAPACITY POUNDS	
90	30	80.7	135.6	53,500*							30
	35	78.5	134.5	51,900*							35
	40	76.2	133.2	50,400*	79.2	132.2	46,000*				40
	45	73.9	131.7	48,900*	76.9	130.7	44,900*	80.0	128.5	39,500*	45
	50	71.6	130.0	47,600*	74.6	128.9	43,800*	77.7	126.7	37,400*	50
	55	69.2	128.0	46,400*	72.2	126.9	42,900*	75.2	124.7	35,600*	55
	60	66.8	125.8	45,300*	69.8	124.7	42,000*	72.7	122.4	34,000*	60
	65	64.3	123.3	44,200*	67.3	122.2	41,200*	70.2	119.9	32,600*	65
	70	61.8	120.6	43,300*	64.7	119.5	40,500*	67.6	117.0	31,300*	70
	75	59.2	117.5	42,300*	62.1	116.4	39,800*	64.9	113.9	30,100*	75
	80	56.6	114.2	41,500*	59.4	113.0	38,600*	62.2	110.4	29,000*	80
	85	53.8	110.5	40,700*	56.7	109.2	36,700*	59.3	106.5	28,000*	85
	90	51.0	106.3	40,000*	53.8	105.1	35,100*	56.4	102.3	27,200*	90
	100	44.8	96.7	38,300*	47.5	95.3	32,300*	49.9	92.2	25,700*	100
	110	37.9	84.6	34,800*	40.5	82.9	30,000*				110
	120	29.6	68.6	31,900*	31.9	66.4	28,200*				120
100	35	79.3	144.7	52,500*							35
	40	77.2	143.6	51,000*	80.0	142.5	46,400*				40
	45	75.1	142.2	49,700*	77.9	141.1	45,300*	80.8	138.9	40,200*	45
	50	72.9	140.6	48,400*	75.7	139.5	44,300*	78.6	137.2	38,200*	50
	55	70.7	138.8	47,200*	73.5	137.7	43,400*	76.4	135.4	36,500*	55
	60	68.5	136.7	46,100*	71.3	135.6	42,600*	74.1	133.3	34,900*	60
	65	66.3	134.5	45,100*	69.0	133.4	41,800*	71.8	131.0	33,500*	65
	70	64.0	132.0	44,100*	66.7	130.9	41,100*	69.4	128.4	32,200*	70
	75	61.7	129.2	43,200*	64.4	128.1	40,400*	67.0	125.6	31,000*	75
	80	59.3	126.2	42,400*	62.0	125.0	39,800*	64.6	122.4	29,900*	80
	85	56.8	122.9	41,600*	59.5	121.7	38,600*	62.0	119.0	28,900*	85
	90	54.3	119.2	40,900*	56.9	118.0	36,900*	59.4	115.2	28,100*	90
	100	48.9	110.8	39,600*	51.5	109.4	34,000*	53.8	106.5	26,500*	100
	110	43.1	100.6	37,300*	45.5	99.0	31,500*	47.7	95.7	25,300*	110
	120	36.4	87.8	34,200*	38.8	86.0	29,500*				120
	130	28.4	71.0	30,700							130
110	35	80.0	155.0	53,000*							35
	40	78.1	153.9	51,600*	80.7	152.8	46,700*				40
	45	76.1	152.6	50,300*	78.7	151.5	45,700*				45
	50	74.1	151.1	49,100*	76.7	150.0	44,800*	79.4	147.7	38,900*	50
	55	72.1	149.4	47,900*	74.7	148.3	43,900*	77.4	146.0	37,200*	55
	60	70.1	147.5	46,900*	72.6	146.4	43,100*	75.3	144.0	35,700*	60
	65	68.0	145.5	45,800*	70.6	144.3	42,300*	73.1	141.9	34,300*	65
	70	65.9	143.2	44,900*	68.4	142.0	41,600*	71.0	139.6	33,000*	70
	75	63.7	140.7	44,000*	66.3	139.5	40,900*	68.8	137.0	31,800*	75
	80	61.6	137.9	43,200*	64.1	136.7	40,300*	66.5	134.1	30,800*	80
	85	59.3	134.9	42,400*	61.8	133.7	39,700*	64.2	131.0	29,800*	85
	90	57.0	131.6	41,600*	59.5	130.3	38,600*	61.9	127.6	28,900*	90
	100	52.3	124.1	40,300*	54.7	122.7	35,600*	56.9	119.8	27,300*	100
	110	47.1	115.1	39,100	49.5	113.6	33,000*	51.6	110.5	26,000*	110
	120	41.5	104.3	34,300	43.8	102.7	30,900*	45.7	99.1	24,900*	120
	130	35.1	90.9	30,200	37.2	89.0	29,200*				130
	140	27.4	73.3	26,800							140
120	35	80.7	165.2	53,500*							35
	40	78.8	164.1	52,200*							40
	45	77.0	162.9	50,900*	79.5	161.8	46,100*				45
	50	75.1	161.5	49,700*	77.6	160.4	45,200*	80.1	158.1	39,500*	50
	55	73.3	160.0	48,600*	75.7	158.9	44,300*	78.2	156.5	37,900*	55
	60	71.4	158.2	47,500*	73.8	157.1	43,500*	76.3	154.7	36,400*	60
	65	69.4	156.3	46,600*	71.9	155.2	42,800*	74.3	152.7	35,000*	65
	70	67.5	154.2	45,600*	69.9	153.0	42,100*	72.3	150.5	33,800*	70
	75	65.5	151.9	44,700*	67.9	150.7	41,400*	70.3	148.2	32,600*	75
	80	63.5	149.3	43,900*	65.9	148.1	40,800*	68.2	145.5	31,500*	80
	85	61.5	146.5	43,100*	63.8	145.3	40,200*	66.1	142.7	30,600*	85
	90	59.4	143.5	42,400*	61.7	142.3	39,700*	63.9	139.6	29,700*	90
	100	55.0	136.7	41,100*	57.3	135.4	37,200*	59.5	132.6	28,100*	100
	110	50.4	128.7	38,700	52.7	127.3	34,500*	54.7	124.3	26,700*	110
	120	45.5	119.2	33,900	47.7	117.7	32,300*	49.6	114.4	25,600*	120
	130	40.1	107.8	29,900	42.2	106.1	30,300	43.9	102.4	24,700*	130
	140	33.9	93.8	26,500	35.9	91.8	26,800				140
	150	26.4	75.5	23,500							150

Copyright 2013–2014 National Commission for the Certification of Crane Operators. All rights reserved. LD LCM MOBILE REV 04/14